REACH® 瑞迪智驱
TOP 价值源于核心技术

谐波减速机

Harmonic Reducer

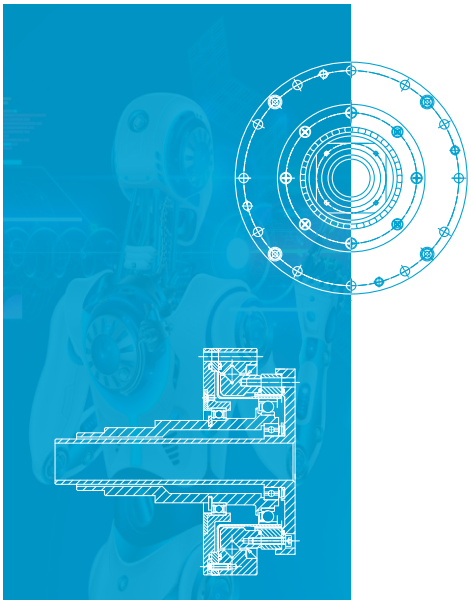

成都瑞迪智驱科技股份有限公司
Reach Machinery Co., Ltd.

About REACH
关于瑞迪

成都瑞迪智驱科技股份有限公司创立于2009年，是一家致力于传动与制动系统关键零部件研发、生产与销售的高新技术企业。公司产品包括精密传动件、电磁制动器、谐波减速机等，广泛应用于机器人、自动化生产线、电梯、风电、数控设备、起重机、塔吊、电动叉车、自动化立体停车库、高空平台车等自动化设备和高端装备制造领域。产品面向国内外销售，与全球多个行业头部和标杆企业形成了长期稳定的战略合作关系。

瑞迪始终坚持以技术为先导的战略发展模式，坚持诚信的质量理念，不断打造以结果和责任为中心的高效管理 。瑞迪强调企业文化和核心价值观的影响力和渗透力，不断提高公司的凝聚力和市场的开拓能力。瑞迪的经营理念是通过向客户、市场、社会做出有价值的贡献，获得社会承认，通过技术、品质和管理赢得自身的发展和壮大。

REACH MACHINERY CO., LTD. founded in 2009, is a high-tech enterprise dedicated to the R & D, production and sales of key components of transmission and braking systems. REACH's products, including precision transmission parts, electromagnetic brakes, harmonic reducers,etc., are widely used in the manufacturing fields of automation equipment and high-end equipment, such as robots, automatic production lines, elevators, wind power, numerical control equipment, cranes, tower cranes, electric forklifts, automatic three-dimensional parking garages, high-altitude platform vehicles, etc. The products are sold at domestic and abroad, and established a formed long-term and stable strategic cooperative relations with many industry leaders and benchmark enterprises around the world.

REACH MACHINERY CO., LTD. has been insisted on the strategic development mode with technology as the guide, devoted us to the quality concept of integrity, and constantly creates an efficient management centered on results and responsibility. REACH emphasizes the influence and penetration of corporate culture and core values, and continuously improves the company's cohesion and market development ability. REACH's business philosophy is to gain social recognition through creating valuable contributions to customers, the market and the society, and to win its own development and expansion through technology, quality and management.

瑞迪谐波减速机

REACH Harmonic Reducer

独创的RH齿形

独创的RH齿形，具有连续多圆弧啮合曲面的特点，能适应较大弹性变形。在承受大载荷时，同时啮合的齿数大于36%，可以显著改善噪音、振动、传动精度、刚性和寿命。

Original RH Tooth Profile

REACH innovation team creates the RH tooth profile with the characteristics of continuous multi-arc-meshing surface. This RH tooth can adapt to large elastic deformation. Under heavy condition, more than 36% teeth meshed at the same time, which could significantly improve the performance of the harmonic reducer, such as: noise, vibration, transmission accuracy, rigidity and lifetime, etc.

优质材料、精良工艺

材料的化学成分和非金属夹杂物含量，直接影响材料疲劳寿命，而谐波减速机独特的传动原理决定了其关键零件对材料有严苛的要求。瑞迪谐波减速机使用高纯度金属材料，特有的精锻工艺和热处理工艺保证了关键零件可靠性。

High Quality Material and Excellent Process Technology

The material fatigue life will be directly affected by its chemical composition and content of non-metallic inclusion. The harmonic reducer has unique transmission principle, which has strict material requirements for its key components. Based on High-purity metal materials, unique precision forging process technology and heat treatment process technology, REACH can guarantee the reliability of key harmonic reducer components.

精密的制造设备

谐波减速机传动精度高，角度传动误差要求不高于1′，因此对生产设备也有严苛的精度要求。瑞迪拥有生产高精度谐波减速机所需的全套高精密加工和检测设备，从坯料到包装整个流程均在恒温条件下进行，保证了产品品质。

Precision Manufacturing Equipment

The harmonic reducer has high transmission accuracy. Its angular transmission error shall be ≤ 1 '. Therefore, the manufacturing equipment has strict precision requirements. REACH has the full set of high precision manufacturing equipment and inspection equipment for harmonic reducer. The whole process is under constant temperature workshop. We insist on high quality first.

专业的测试能力

不仅有常规的谐波减速机性能和寿命测试设备，还有客户常用的减速机应用产品测试设备，如测试用小六轴机器人、协作机器人等，可模拟各类工况进行测试。

Professional Inspection

With the ordinary performance and life test equipment, as well as various of application testing equipment in testing center, such as six-axis robot, cooperative robot,etc., REACH can test the harmonic reducer performance under various simulated working conditions.

瑞迪谐波减速机

REACH Harmonic Reducer

定制化设计

- 客户需求为导向的设计理念，可为您提供高质量的个性化产品需求方案和问题解决方案。

Provide Customized Services

- Customer demand-oriented design concept can meet the customers' high-quality personalized product demand and provide application solutions.

质量保证

高精度数控生产设备，产品精度的保证

- 进口高精度车床
- 进口高精度插齿机
- 进口高精度滚齿机
- 进口高精度非圆磨削设备
- 进口高精度线切割设备
- 高级表面处理设备
- 进口高精度车齿机

专业的检测能力

- 进口高性能三坐标测量台
- 谐波减速机高精度综合性能测试台
- 高精度轮廓仪
- 金属金相分析仪
- 表面应力分布检验台
- 对偶件耐磨性检测台
- 振动测试仪

全面的测试能力

- 谐波动态加载测试台
- 带光栅的传动精度、重复精度测试
- 刚度、滞后损失、齿隙测试
- 传动效率测试台
- 棘爪扭矩测试
- 恒负载寿命测试
- 摆臂变负载寿命测试
- 快速正反转寿命测试
- 多种机器人装机寿命测试：焊接机器人、SCARA机器人、小六轴机器人、协作机器人
- 交叉滚子轴承漏油测试
- 振动频谱分析测试台

Quality Assurance

High precision equipment processing, ensure product accuracy

- Imported high precision machine tool
- Imported high precision gear shaper
- Imported high precision gear hobbing machine equip ment
- Imported high precision non-circular grinding
- Imported high precision wire cutting equipment
- Advanced surface treatment equipment
- Imported high precision gear turning machine

Professional Inspection

- Imported high-performance CMM
- High precision comprehensive performance test bench
- High precision profiler
- Metal metallographic analyzer
- Surface stress distribution test bench
- Wear resistance test of counterpart
- Vibration tester

Comprehensive testing capability

- Harmonic reducer dynamic loading test bench
- Test of transmission accuracy and repetition accuracy with grating
- Stiffness, hysteresis loss, backlash test
- Transmission efficiency test bench
- Pawl torque test
- Constant load life test
- Variable load life of swing arm test
- Fast forward and reverse life test
- Installation life test of multiple robots：Welding robot, SCARA robot, small six axis robot, cooperative robot
- Oil leakage test of cross roller bearing
- Vibration spectrum analysis test bench

快速交付和响应

- 2-3周快速交付，客户要求最快1小时响应。

Fast delivery and Quick responce

- Fast delivery within 2~3 weeks,Quick responce within 1 hour

CONTENTS 目录

RCSG Series of Harmonic reducer

RCSG-I Series

RCSG-I is standard cup-shaped structure. The input shaft is directly matched with the wave generator's inner bore by a flat key. Generally, the circular spline end will be fixed, and the flex-spline end is the output.

RCSG-II Series

RCSG-II is standard cup-shaped structure. The input shaft is connected to the wave generator's inner hole through an Oldham coupling. Generally, the circular spline end will be fixed, and the flex-spline end is the output.

RCSG-III Series

RCSG-III is composed of three parts: a flexspline, a rigid circular spline,and a wave generator. The flexspline is standard cup-shaped structure. The input shaft is directly matched with the wave generator's inner bore by flat key or screws.

RCSG Series of Harmonic reducer

Start Torque of RCSG-I/II series (cNm)							
Ratio \ Model	14	17	20	25	32	40	45
30	6.4	9.3	15	25	54	-	-
50	4.1	6.1	7.8	15	31	62	85
80	2.8	4	4.9	9.2	19	38	54
100	2.5	3.4	4.3	8	18	35	47
120	-	3.2	3.8	7.3	15	30	43
160	-	-	4	7	14	27	36

Start Torque of RCSG-III series (cNm)									
Ratio \ Model	8	11	14	17	20	25	32	40	45
30	1.3	2.7	6.4	9.3	15	25	54	-	-
50	0.8	1.6	4.1	6.1	7.8	15	31	62	70
80	-	-	2.8	4	4.9	9.2	19	38	45
100	0.6	1.1	2.5	3.4	4.3	8	18	35	40
120	-	-	-	3.2	3.8	7.3	15	30	36
160	-	-	-	-	4	7	14	27	32

Rigidity of RCSG series（× 10^4N·m/rad)										
Ratio \ Model		8	11	14	17	20	25	32	40	45
30	K1	0.034	0.084	0.19	0.34	0.57	1	2.4	-	-
	K2	0.044	0.13	0.24	0.44	0.71	1.3	3	-	-
	K3	0.054	0.16	0.34	0.67	1.1	2.1	4.9	-	-
50	K1	0.04	0.22	0.32	0.77	1.24	2.38	5.13	10.00	15.00
	K2	0.07	0.30	0.45	1.05	1.71	3.23	7.41	14.00	20.00
	K3	0.08	0.32	0.54	1.24	2.19	4.18	9.31	18.00	26.00
80 and above	K1	0.09	0.27	0.45	0.95	1.52	2.95	6.37	13.00	18.00
	K2	0.10	0.34	0.58	1.33	2.38	4.75	10.45	20.00	29.00
	K3	0.12	0.44	0.67	1.52	2.76	5.42	11.40	23.00	33.00

RCSG Series of Harmonic reducer

Buckling torque (Nm)									
Model	8	11	14	17	20	25	32	40	45
30	35	90	190	330	560	100	2200	-	-
50 and above	35	90	260	500	800	1700	3500	6700	8900

Pawl torque (Nm)									
Model / Ratio	8	11	14	17	20	25	32	40	45
30	11	29	59	100	170	340	720	-	-
50	12	34	110	190	280	580	1200	2300	3500
80	-	-	140	260	450	880	1800	3600	5000
100	14	43	100	200	330	650	1300	2700	4000
120	-	-	-	150	310	610	1200	2400	3600
160	-	-	-	-	280	580	1200	2300	3300

Hysteresis loss (arc min)									
Model / Ratio	8	11	14	17	20	25	32	40	45
30	3	3	3	3	3	3	3	-	-
50	3	2	2	2	2	2	2	2	2
80 and above	2	2	1	1	1	1	1	1	1

RCSG Series of Harmonic reducer

Model	Reduction Ratio	Rated torque at 2000r/min	Allowable peak torque at start and stop	Allowable average torque	Allowable Max. Momentary torque	Max. input Speed	Allowable average input speed	Back lash (arc sec)	Transmission accuracy (arc sec)	Noise (Db)
		Nm	Nm	Nm	Nm	r/min	r/min	⩽	⩽	⩽
8	30	0.9	1.8	1.4	3.3	8000	3500	59	120	60
	50	1.8	3.3	2.3	6.6			35	120	60
	100	2.4	4.8	3.3	9			20	120	60
11	30	2.2	4.5	3.4	8.5	8000	3500	49	120	60
	50	3.5	8.3	5.5	17			24	120	60
	100	5	11	8.9	25			20	120	60
14	30	3.8	8.5	6.5	16	8000	3500	60	90	60
	50	6.6	23	8.6	43			20	90	60
	80	9.6	29	13.5	57			20	90	60
	100	9.6	34	13.5	66			10	90	60
17	30	8.4	15	11.5	28	7000	3500	30	90	60
	50	19.8	42	32.5	86			20	90	60
	80	27.5	53	33.5	108			20	90	60
	100	30	66	48.5	134			10	90	60
	120	30	66	48.5	107			10	90	60
20	30	14	26	19	48	6000	3500	20	60	60
	50	32	69	42	121			20	60	60
	80	42	91	58	158			20	60	60
	100	50	102	61	182			10	60	60
	120	50	108	61	182			10	60	60
	160	50	113	61	182			10	60	60
25	30	26	48	36	90	5500	3500	20	60	60
	50	48	121	68.5	230			20	60	60
	80	78	169	107.5	315			20	60	60
	100	84	194	133	351			10	60	60
	120	84	207	133	376			10	60	60
	160	84	217	133	388			10	60	60
32	30	51	95	71	190	4500	3500	20	60	60
	50	94	267	133	472			20	60	60
	80	146	376	206	702			20	60	60
	100	169	411	267	800			10	60	60
	120	169	436	267	848			10	60	60
	160	169	459	267	848			10	60	60
40	50	169	497	242	847	4000	3000	20	60	60
	80	255	641	351	1210			20	60	60
	100	328	702	460	1334			10	60	60
	120	363	762	557	1458			10	60	60
	160	363	800	557	1458			10	60	60
45	50	229	650	345	1235	3800	3000	20	60	60
	80	407	918	507	1651			20	60	60
	100	459	982	650	2041			10	60	60
	120	523	1070	806	2288			10	60	60
	160	523	1147	819	2483			10	60	60

RCSG Series of Harmonic reducer

RCSG-I series drawings

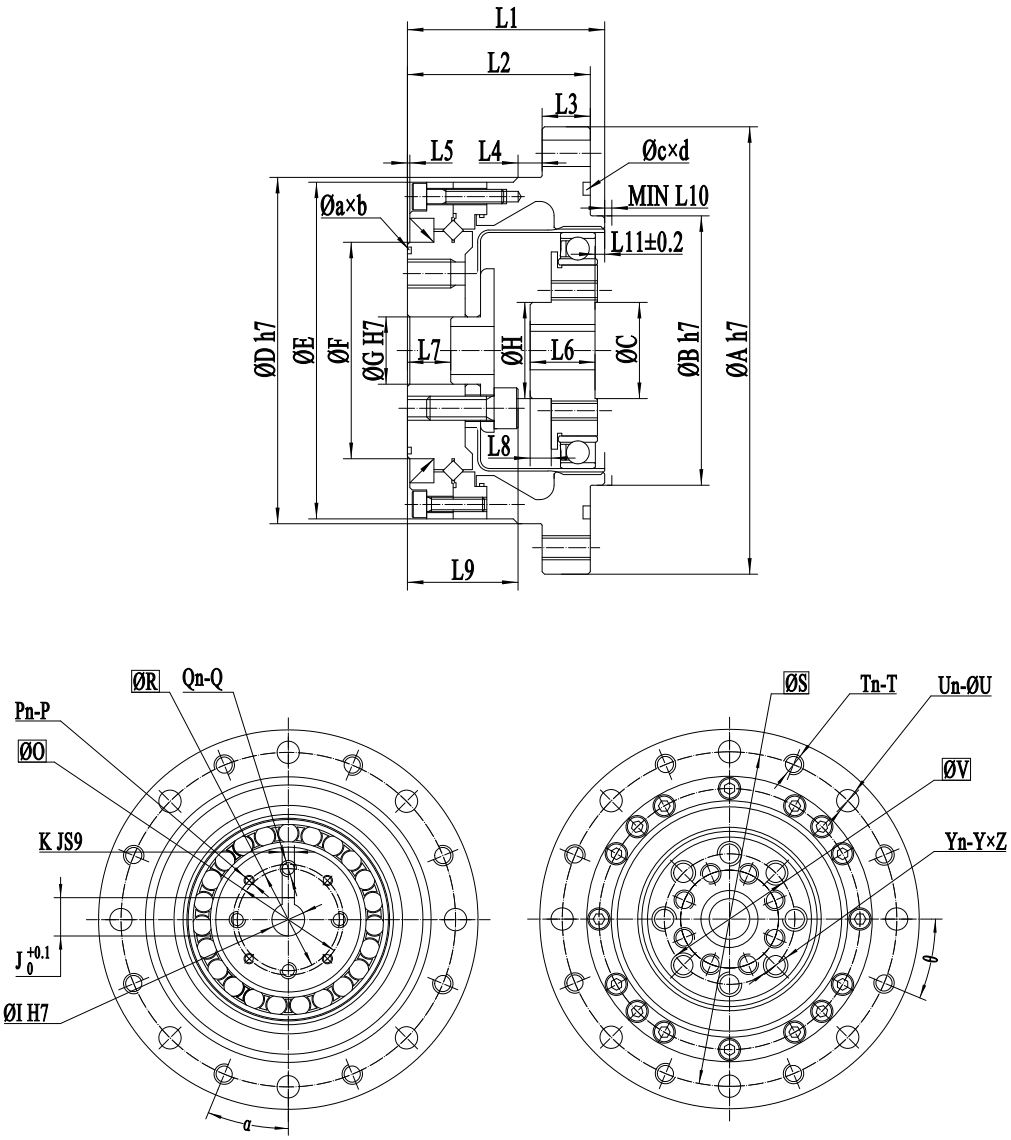

RCSG Series of Harmonic reducer

RCSG-I Parameter Table

code \ model	14	17	20	25	32	40	45
ØA h7	73	79	93	107	138	160	180
ØB h7	38	48	56	67	90	110	124
ØC	22.5	27	30	40	54.5	60	75
ØD h7	56	63	72	86	113	127	148
ØE	55	62	70	85	112	126	147
ØF	31	38	45	58	78	90	107
ØG h7	11	10	14	20	26	32	32
ØH	14	16	20	22	30	32	38
ØI h7	6	8	8	14	14	14	19
J	7	9.4	9.4	16.3	16.3	16.3	21.8
K JS9	2JS9	3JS9	3JS9	5JS9	5JS9	5JS9	6JS9
ØO	19	23	27	35	38	-	-
Pn	4	4	4	4	4	-	-
P	M2	M2	M2.5	M2.5	M3	-	-
Qn	2	2	4	4	4	4	4
Q	M4	M4	M4	M5	M5	M5	M5
ØR	18	22	25	32	36	50	60
ØS	65	71	82	96	125	144	164
Tn	8	8	8	10	12	10	12
T	M4	M4	M5	M5	M6	M8	M8
Un	8	8	8	10	12	10	10
ØU	4.5	4.5	5.5	5.5	6.6	9	9
ØV	23	27	32	42	55	68	82
Yn	6	6	8	8	8	8	8
Y	M4	M5	M6	M8	M10	M10	M12
Z	12.5	12.5	12	15	18	16	18
L1	36	39	41	49	60	70.5	78
L2	34	37	38	46	57	66.5	74
L3	7	8	10	10	12	16	16
L4	3.5	4	5	5	5	5	6
L5	0.5	0.5	0.5	0.5	1	1.5	1
L6	10	12.5	13.5	14.5	16	20	20.4
L7	9.4	9.5	9	12	15	20.5	21
L8	1.8	4.7	4.7	5.5	3	4	4
L9	21.4	23.5	23	29	35.2	39.5	45.5
MIN L10	2	2	2	2	2.5	2.5	3
L11±0.2	0.5±0.2	1.2±0.2	2±0.2	3.1±0.2	3±0.2	3.6±0.2	5.2±0.2
Øa	28.5	34	40	52	69	85	-
b	0.6	0.8	1	1	1.5	1.5	-
Øc	50	55	64	79	104	142	152
d	1.5	1.5	1.5	2	2	2	2
α°	22.5	22.5	22.5	18	15	18	18

RCSG Series of Harmonic reducer

RCSG-II series drawings

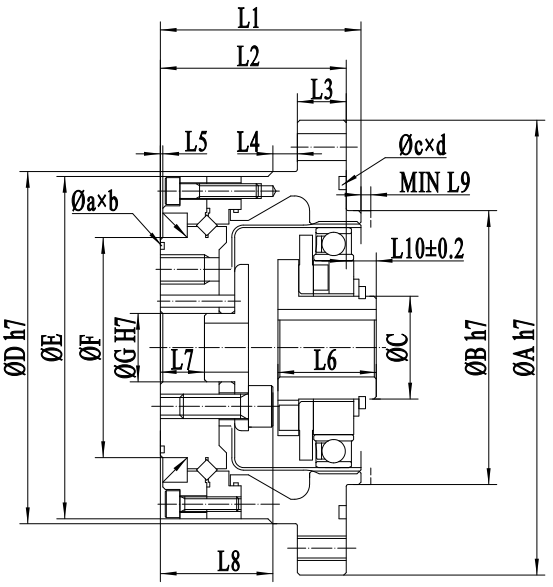

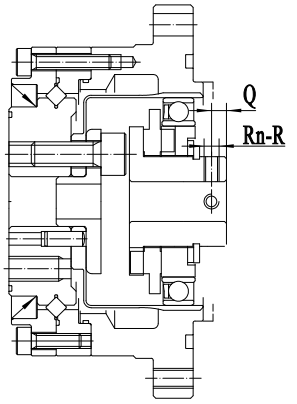

14、17规格

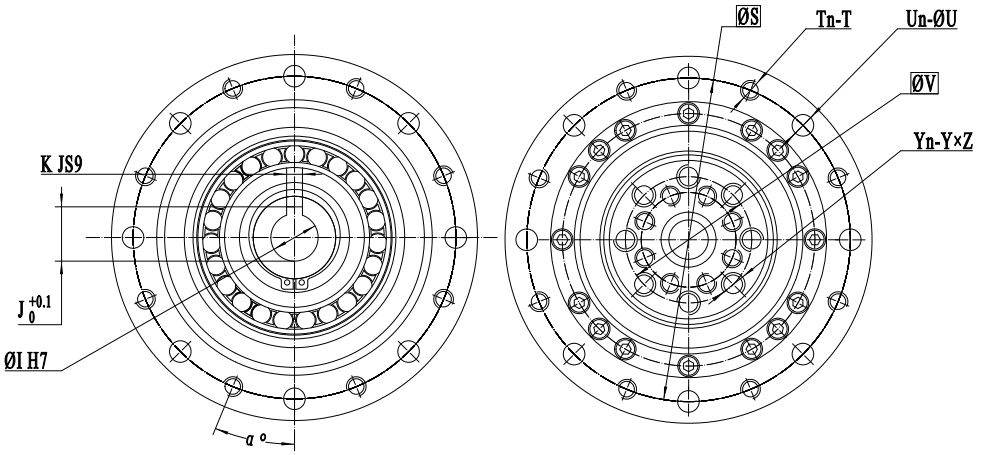

RCSG Series of Harmonic reducer

RCSG-II Parameter Table

code \ model	14	17	20	25	32	40	45
ØA h7	73	79	93	107	138	160	180
ØB h7	38	48	56	67	90	110	124
ØC	14	18	21	26	26	32	32
ØD h7	56	63	72	86	113	127	148
ØE	55	62	70	85	112	126	147
ØF	31	38	45	58	78	90	107
ØG h7	11	10	14	20	26	32	32
ØI h7	6	8	8	14	14	14	19
J	-	-	9.4	16.3	16.3	16.3	21.8
K JS9	-	-	3JS9	5JS9	5JS9	5JS9	6JS9
Q	2.5	3	-	-	-	-	-
Rn	2	2	-	-	-	-	-
R	M3	M3	-	-	-	-	-
ØS	65	71	82	96	125	144	164
Tn	8	8	8	10	12	10	12
T	M4	M4	M5	M5	M6	M8	M8
Un	8	8	8	10	12	10	10
ØU	4.5	4.5	5.5	5.5	6.6	9	9
ØV	23	27	32	42	55	68	82
Yn	6	6	8	8	8	8	8
Y	M4	M5	M6	M8	M10	M10	M12
Z	12.5	12.5	12	15	18	16	18
L1	36	39	41	49	60	70.5	78
L2	34	37	38	46	57	66.5	74
L3	7	8	10	10	12	16	16
L4	3.5	4	5	5	5	5	6
L5	0.5	0.5	0.5	0.5	1	1.5	1
L6	17.7	20	21.5	21.6	23.6	29.7	30.5
L7	9.4	9.5	9	12	15	16.5	17
L8	21.4	23.5	23	29	35.2	39.5	45.5
MIN L9	2	2	2	2	2.5	2.5	3
L10±0.2	7±0.2	7.5±0.2	7.5±0.2	6±0.2	5±0.2	6±0.2	5.5±0.2
Øa	28.5	34	40	52	69	85	-
b	0.6	0.8	1	1	1.5	1.5	-
Øc	50	55	64	79	104	142	152
d	1.5	1.5	1.5	2	2	2	2
α°	22.5	22.5	22.5	18	15	18	18

RCSG Series of Harmonic reducer

RCSG-III series drawings

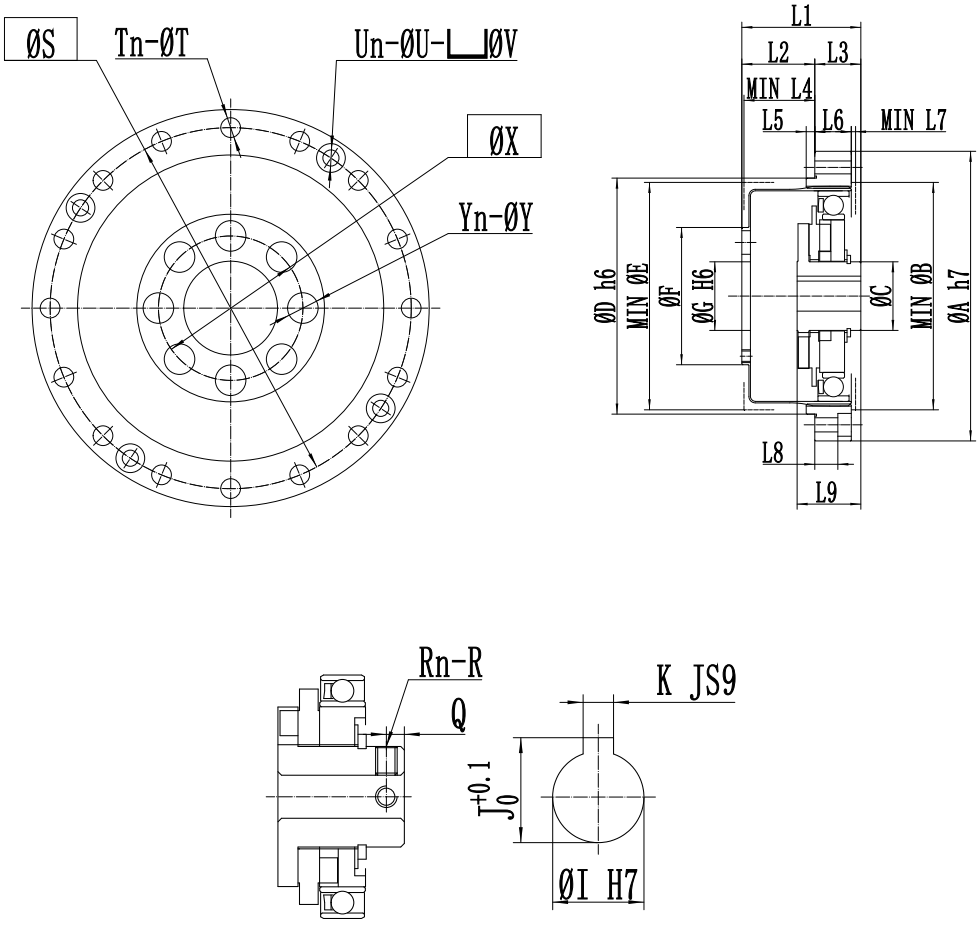

Wave generator shape for Model 14/17

RCSG Series of Harmonic reducer

RCSG-III Parameter Table

model / code	8	11	14	17	20	25	32	40	45
ØA h7	30	40	50	60	70	85	110	135	155
MIN ØB	-	-	38	45	53	66	86	106	119
ØC	7	11	14	18	21	26	26	32	32
ØD h7	-	31	38	48	54	67	90	110	124
ØE	21.5	30	38	45	53	66	86	106	119
ØF	12.3	17.8	23	27.2	32	40	52	64	72
ØG h7	6	6	11	10	16	20	26	32	36
ØI h7	3	5	6	8	8	14	14	14	19
J	-	-	-	-	9.4	16.3	16.3	16.3	21.8
K JS9	-	-	-	-	3JS9	5JS9	5JS9	5JS9	6JS9
Q	2	3	2.5	3	-	-	-	-	-
Rn	2	2	2	2	-	-	-	-	-
R	M2	M3	M3	M3	-	-	-	-	-
ØS	25.5	35	44	54	62	75	100	120	140
Tn	8	8	8	16	16	16	16	16	16
T	2.4	3	3.5	3.5	3.5	4.5	5.5	6.6	9
Un	4	4	4	4	4	4	4	4	4
ØU	2.4	3	3.5	3.5	3.5	3.5	3.5	5.5	6.6
ØV	-	-	-	-	6.5	6.5	8	9.5	12
ØX	-	12	17	19	24	30	40	50	54
Yn	-	6	6	6	8	8	8	8	8
Y	-	3.5	4.5	5.5	5.5	6.6	9	11	13.5
L1	22±0.1	25.5±0.3	28.3±0.2	32.3±0.2	33±0.5	36.5±0.5	43.5±0.5	52.5±0.5	58.2±0.5
L2	12.4±0.1	14.7±0.2	17.7±0.2	20.25±0.25	21.8±0.3	24.3±0.3	28.3±0.3	34.3±0.3	37.7±0.3
L3	9.6	11.3	11	12.5	12	13	16	19	20.5
MIN L4	11.34	14	17.1	19	20.5	23	26.8	33	36.5
L5	-	2	2	2.5	3	3	3	4	4
L6	4.5	5	6	6.5	7.5	10	14	17	19
MIN L7	0.5	0.5	1	1	1.5	1.5	1.5	2	2
L8	4.5	5	6	6.5	4	6	7	12	12
L9	12	16	17.6	19.6	20.1	19.2	21.5	29.7	30.5

RHSG Series of Harmonic reducer

RHSG-I Series

RHSG-I is standard hollow hat shaped harmonic reducer, with compact structure. The input shaft is directly matched with the wave generator's inner bore by a flat key. Generally, the circular spline end will be fixed, and the flex-spline end is the output.

RHSG-II Series

RHSG-II is standard hollow hat shaped harmonic reducer, with compact structure. The input shaft is connected to the wave generator's inner hole through an Oldham coupling. Generally, the circular spline end will be fixed, and the flex-spline end is the output.

RHSG-III Series

RHSG-III is standard hollow hat shaped harmonic reducer, with compact structure. The wave generator's center is a hollow shaft, the reducer inside designed with bearing support. This model is very suitable for threading. The fully sealed structure is easy to install.

RHSG-IV Series

RHSG-IV is standard hollow hat shaped harmonic reducer. The wave generator cam comes with an input shaft. The reducer inside designed with bearing support. This model is very suitable for threading. The fully sealed structure is easy to install.

RHSG Series of Harmonic reducer

Start Torque of RHSG-I/II series (cNm)							
Ratio \ Model	14	17	20	25	32	40	45
30	6.4	9.3	15	25	54	-	-
50	4.1	6.1	7.8	15	31	62	85
80	2.8	4	4.9	9.2	19	38	54
100	2.5	3.4	4.3	8	18	35	47
120	-	3.2	3.8	7.3	15	30	43
160	-	-	3.5	7	14	27	36

Start Torque of RHSG-III series (cNm)							
Ratio \ Model	14	17	20	25	32	40	45
30	11	30	43	64	112	-	-
50	8.8	27	36	56	85	136	165
80	7.5	25	33	50	74	117	138
100	6.9	24	32	49	72	112	131
120	-	23	31	48	68	110	126
160	-	-	30	46	65	105	122

Start Torque of RHSG-IV series (cNm)							
Ratio \ Model	14	17	20	25	32	40	45
30	6.8	11	19	26	63	-	-
50	5.7	9.7	14	22	41	72	94
80	4.4	7.2	11	15	29	52	68
100	3.7	6.5	9.9	14	27	47	60
120	-	6	9.3	13	24	44	55
160	-	-	9	12	22	39	50

RHSG Series of Harmonic reducer

RHSG Rigidity（× 10^4N·m/rad）								
Ratio \ Model		14	17	20	25	32	40	45
30	K1	0.19	0.34	0.57	1	2.4	-	-
	K2	0.24	0.44	0.71	1.3	3	-	-
	K3	0.34	0.67	1.1	2.1	4.9	-	-
50	K1	0.32	0.77	1.24	2.38	5.13	10.00	15.00
	K2	0.45	1.05	1.71	3.23	7.41	14.00	20.00
	K3	0.54	1.24	2.19	4.18	9.31	18.00	26.00
80 and above	K1	0.45	0.95	1.52	2.95	6.37	13.00	18.00
	K2	0.58	1.33	2.38	4.75	10.45	20.00	29.00
	K3	0.67	1.52	2.76	5.42	11.40	23.00	33.00

Buckling torque（Nm）							
Model	14	17	20	25	32	40	45
30	140	270	440	1300	890	-	-
50 and above	210	420	700	1300	2800	5200	6300

Pawl torque（Nm）							
Ratio \ Model	14	17	20	25	32	40	45
30	59	100	170	340	720	-	-
50	110	190	280	580	1200	2300	3500
80	140	260	450	880	1800	3600	5000
100	100	200	330	680	1300	2700	4000
120	-	150	310	610	1200	2400	3600
160	-	-	280	580	1200	2300	3300

Hysteresis loss（arc min）							
Ratio \ Model	14	17	20	25	32	40	45
30	3	3	3	3	3	-	-
50	2	2	2	2	2	2	2
80 and above	1	1	1	1	1	1	1

RHSG Series of Harmonic reducer

Model	Reduction Ratio	Rated torque at 2000r/min	Allowable peak torque at start and stop	Allowable average torque	Allowable Max. Momentary torque	Max. input Speed	Allowable average input speed	Back lash (arc sec)	Transmission accuracy (arc sec)	Noise (Db)
		Nm	Nm	Nm	Nm	r/min	r/min	≤	≤	≤
14	30	3.8	8.6	7.8	16	8000	3500	60	120	60
	50	6.6	23	8.6	43			20	90	60
	80	9.6	29	13.5	57			20	90	60
	100	9.6	34	13.5	66			10	90	60
17	30	8.4	15.2	11.5	29	7000	3500	30	90	60
	50	19.8	42	32	86			20	90	60
	80	27.5	53	33	108			20	90	60
	100	30	66	49	134			10	90	60
	120	30	66	49	107			10	90	60
20	30	14	26	19	48	6000	3500	20	90	60
	50	32	69	42	121			20	60	60
	80	42	91	58	158			20	60	60
	100	50	102	61	182			10	60	60
	120	50	108	61	182			10	60	60
	160	50	113	61	182			10	60	60
25	30	26	48	36	90	5500	3500	20	60	60
	50	48	121	68.5	230			20	60	60
	80	78	169	107	315			20	60	60
	100	84	194	133	351			10	60	60
	120	84	207	133	376			10	60	60
	160	84	217	133	388			10	60	60
32	30	51	95	71	190	4500	3500	20	90	60
	50	94	267	133	472			20	60	60
	80	146	376	206	702			20	60	60
	100	169	411	267	800			10	60	60
	120	169	436	267	848			10	60	60
	160	169	459	267	848			10	60	60
40	50	169	497	242	847	4000	3000	20	60	60
	80	255	641	351	1210			20	60	60
	100	328	702	460	1334			10	60	60
	120	363	762	557	1458			10	60	60
	160	363	800	557	1458			10	60	60
45	50	229	650	345	1235	3800	3000	20	60	60
	80	407	918	507	1651			20	60	60
	100	459	982	650	2041			10	60	60
	120	523	1070	806	2288			10	60	60
	160	523	1147	819	2483			10	60	60

RHSG Series of Harmonic reducer

RHSG - I series drawings

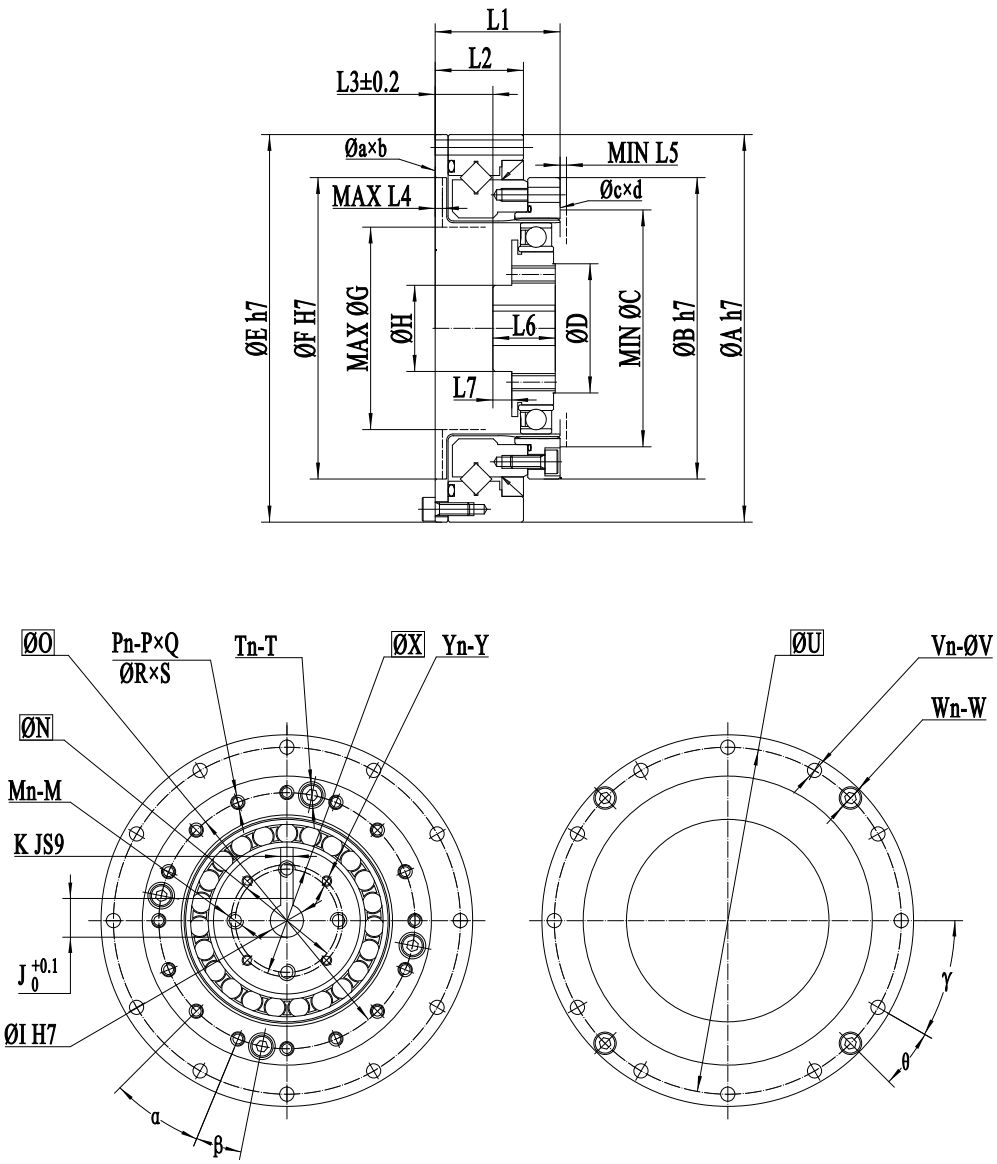

RHSG Series of Harmonic reducer

RHSG - I Parameter Table

code \ model	14	17	20	25	32	40	45
ØA h7	70	80	90	110	142	170	190
ØB h7	50	60	70	85	110	135	155
MIN ØC	38	45	53	66	86	106.5	119
ØD	22.5	28	30	40	54.5	60	75
ØE h7	70	80	90	110	142	170	190
ØF H7	48	60	70	88	114	140	158
MAX ØG	31	38	45	56	73	90	101
ØH	14	16	20	22	30	32	38
ØI h7	6	8	8	14	14	14	19
J	7	9.4	9.4	16.3	16.3	16.3	21.8
K JS9	2JS9	3JS9	3JS9	5JS9	5JS9	5JS9	6JS9
Mn	2	2	4	4	4	4	4
M	M4	M4	M4	M5	M5	M5	M5
N	18	22	25	32	36	50	60
O	44	54	62	77	100	122	140
Pn	8	16	16	16	16	16	12
P	M3	M3	M3	M4	M5	M6	M8
Q	5	5.5	6	7	8	10	10
ØR	3.5	3.5	3.5	4.5	5.5	6.6	9
S	6	6.5	7.5	7	14	17	19
Tn	4	4	4	4	4	4	4
T	M3	M3	M3	M3	M4	M5	M5
ØU	64	74	84	102	132	158	180
Vn	8	12	12	12	12	12	18
ØV	3.5	3.5	3.5	4.5	5.5	6.6	6.6
Wn	4	4	4	4	4	6	6
Wn	M3	M3	M3	M3	M4	M4	M4
ØX	19	23	27	35	38	-	-
Yn	4	4	4	4	4	-	-
Y	M2	M2	M2.5	M2.5	M3	-	-
L1	23.5	26.5	29	34	42	51	56.5
L2	16.5	19	20.5	22	27	33	36.5
L3±0.2	13	13.4	13.4	16.4	22.5	27.4	34.6
MAX L4	1.7	1.7	2	2	2	2	2
MIN L5	2	2	2	2	2.5	2.5	2
L6	10	12.5	13.5	14.5	16	20	20.4
L7	1.8	4.7	4.7	5.5	3.5	4	4
Øa	52	61	69	90	116	143	-
b	1.5	1.5	1.5	2	2	2	-
Øc	36.6	45	54	67	87	107	121.5
d	0.6	1	1	1.5	1.5	1.5	2
α°	30	18	22.5	22.5	22.5	22.5	30
β°	30	18	11.5	11.5	11.5	11.5	15
γ°	45	30	30	30	30	30	20
θ°	22.5	15	15	15	15	15	10

RHSG Series of Harmonic reducer

RHSG - II series drawings

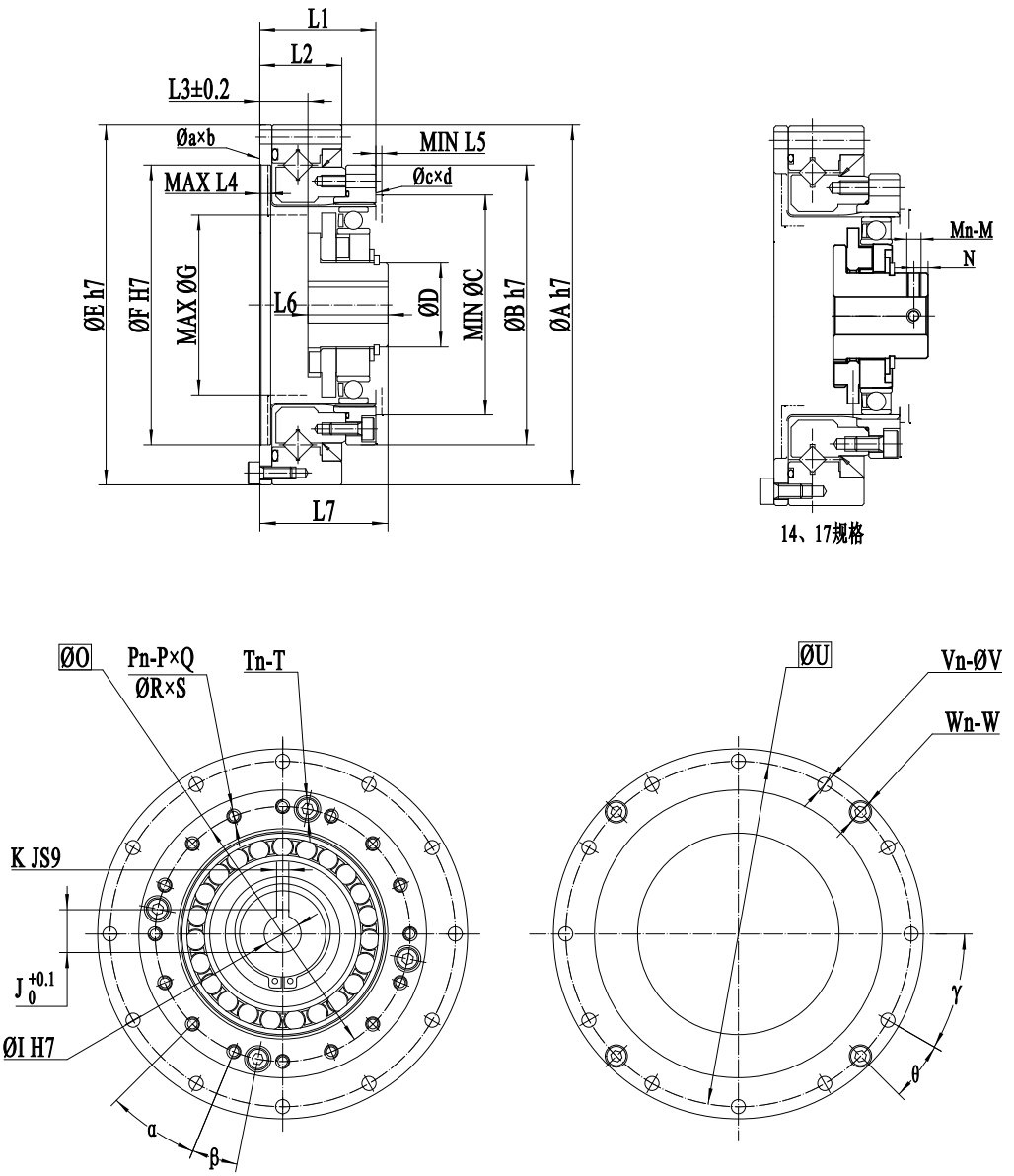

RHSG Series of Harmonic reducer

RHSG - II Parameter Table

code \ model	14	17	20	25	32	40	45
ØA h7	70	80	90	110	142	170	190
ØB h7	50	60	70	85	110	135	155
MIN ØC	38	45	53	66	86	106.5	119
ØD	14	18	21	26	26	32	32
ØE h7	70	80	90	110	142	170	190
ØF H7	48	60	70	88	114	140	158
MAX ØG	31	38	45	56	73	90	101
ØI h7	6	8	8	14	14	14	19
J	-	-	9.4	16.3	16.3	16.3	21.8
K JS9	-	-	3JS9	5JS9	5JS9	5JS9	6JS9
Mn	2	2	-	-	-	-	-
M	M3	M3	-	-	-	-	-
N	2.5	3	-	-	-	-	-
O	44	54	62	77	100	122	140
Pn	8	16	16	16	16	16	12
P	M3	M3	M3	M4	M5	M6	M8
Q	5	5.5	6	7	8	10	10
ØR	3.5	3.5	3.5	4.5	5.5	6.6	9
S	6	6.5	7.5	7	14	17	19
Tn	4	4	4	4	4	4	4
T	M3	M3	M3	M3	M4	M5	M5
ØU	64	74	84	102	132	158	180
Vn	8	12	12	12	12	12	18
ØV	3.5	3.5	3.5	4.5	5.5	6.6	6.6
Wn	4	4	4	4	4	6	6
Wn	M3	M3	M3	M3	M4	M4	M4
L1	23.5	26.5	29	34	42	51	56.5
L2	16.5	19	20.5	22	27	33	36.5
L3±0.2	10.8	12.5	12	15.4	20.4	23.3	27.2
MAX L4	1.7	1.7	2	2	2	2	2
MIN L5	2	2	2	2	2.5	2.5	2
L6	17.7	20	21.5	21.6	23.6	29.7	30.5
L7	28.5	32.5	33.6	37	44	53	58
Øa	52	61	69	90	116	143	-
b	1.5	1.5	1.5	2	2	2	-
Øc	36.6	45	54	67	87	107	121.5
d	0.6	1	1	1.5	1.5	1.5	2
α°	30	18	22.5	22.5	22.5	22.5	30
β°	30	18	11.5	11.5	11.5	11.5	15
γ°	45	30	30	30	30	30	20
θ°	22.5	15	15	15	15	15	10

RHSG Series of Harmonic reducer

RHSG - III series drawings

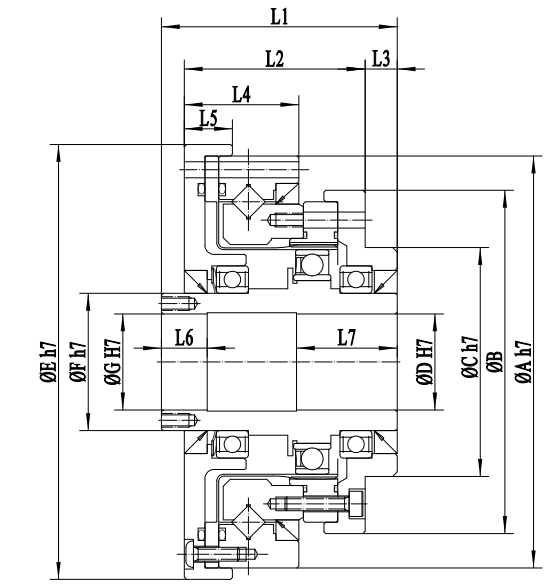

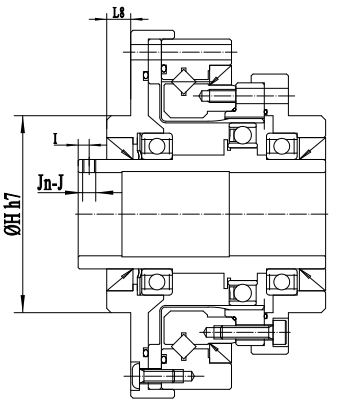

14、17规格

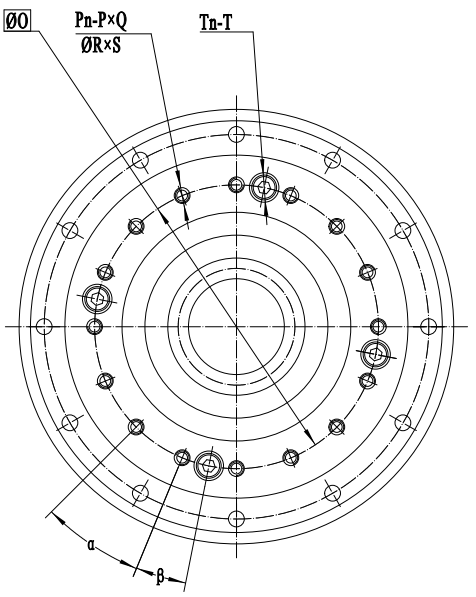

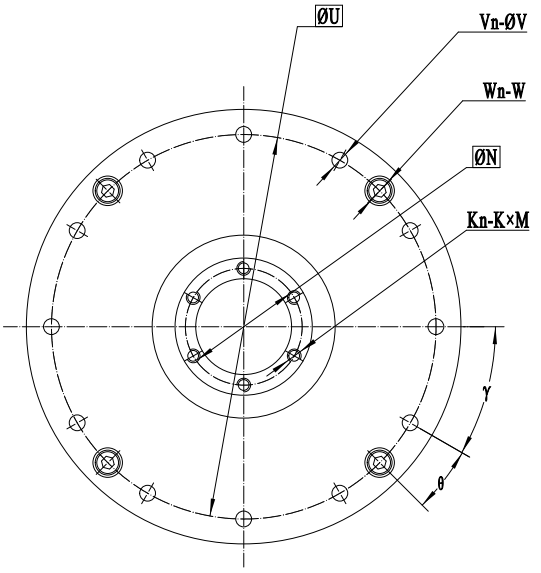

RHSG Series of Harmonic reducer

RHSG - III Parameter Table

code \ model	14	17	20	25	32	40	45
ØA h7	70	80	90	110	142	170	190
ØB	54	64	75	90	115	140	160
ØC h7	36	45	50	60	85	100	120
ØD H7	14	19	21	29	36	46	52
ØE h7	74	84	95	115	147	175	195
ØF h7	20	25	30	38	45	95	64
ØG H7	14	19	21	29	36	46	52
ØH h7	36	45	-	-	-	-	-
I	2.5	2.5	-	-	-	-	-
Jn	3	3	-	-	-	-	-
J	M3	M3	-	-	-	-	-
Kn	-	-	6	6	6	6	6
K	-	-	M3	M3	M3	M4	M4
M	-	-	6	6	6	8	8
ØN	-	-	25.5	33.5	40.5	52	58
ØO	44	54	62	77	100	122	140
Pn	8	16	16	16	16	16	12
P	M3	M3	M3	M4	M5	M6	M8
Q	5	5.5	6	7	8	10	10
ØR	3.5	3.5	3.5	4.5	5.5	6.6	9
S	11.5	12	13.5	15.5	20.5	25	28
Tn	4	4	4	4	4	4	4
T	M3	M3	M3	M3	M4	M5	M5
ØU	64	74	84	102	132	158	180
Vn	8	12	12	12	12	12	18
ØV	3.5	3.5	3.5	4.5	5.5	6.6	6.6
Wn	4	4	4	4	4	6	6
Wn	M3	M3	M3	M3	M4	M4	M4
L1	52.5	56.5	51.5	55.5	65.5	79	85
L2	33	36	39.5	43.5	53.5	64	78
L3	7.5	8.5	7	6	5	7	7
L4	20.5	23	25	26	32	38	42
L5	9	10	10.5	10.5	12	14	15
L6	10	10	10	10	10	12	15
L7	20	22	22	21.5	25	32	35
L8	5.5	5.5	-	-	-	-	-
α°	30	18	22.5	22.5	22.5	22.5	30
β°	30	18	11.5	11.5	11.5	11.5	15
γ°	45	30	30	30	30	30	20
θ°	22.5	15	15	15	15	15	10

RHSG Series of Harmonic reducer

RHSG - IV series drawings

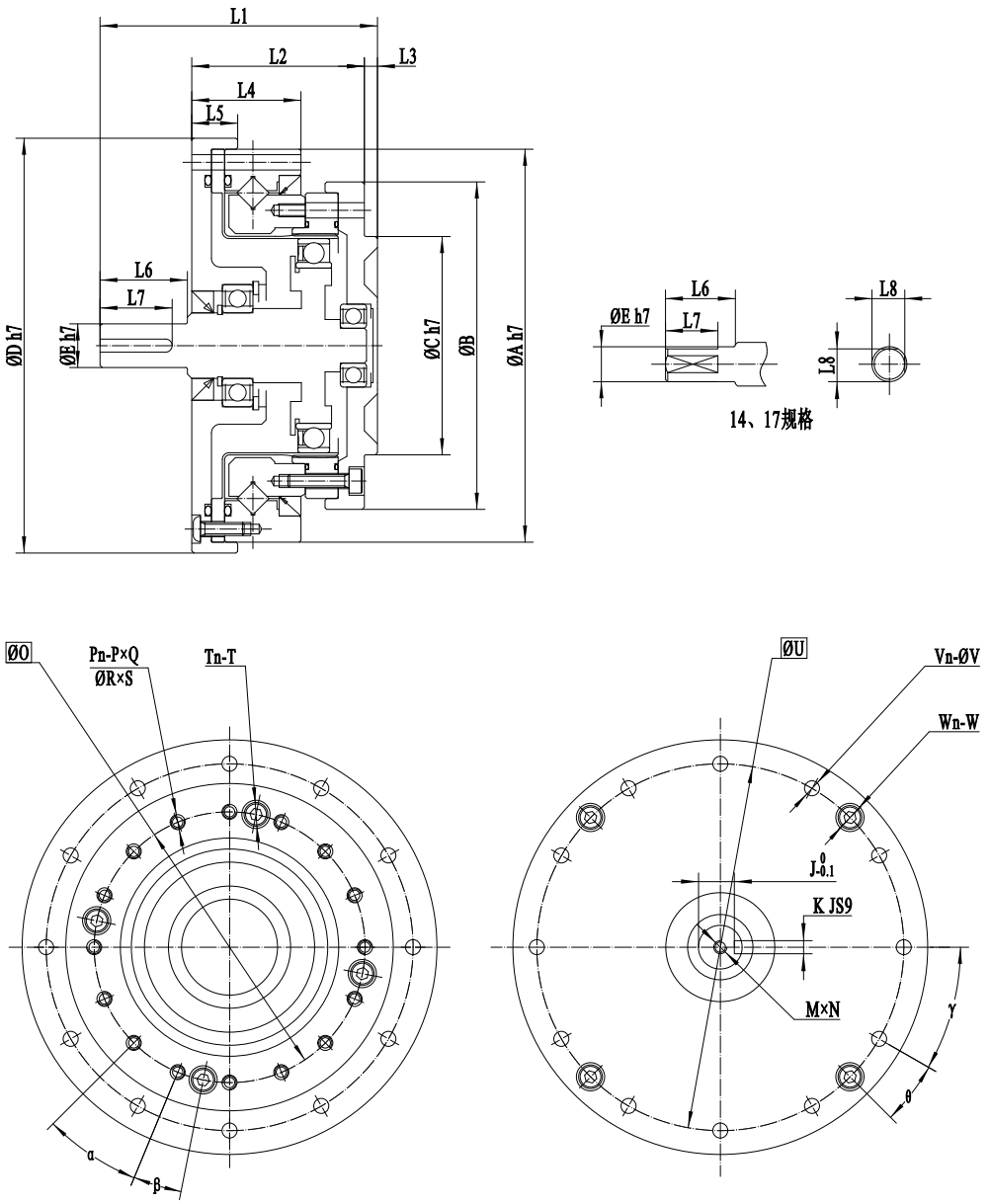

RHSG Series of Harmonic reducer

RHSG - IV Parameter Table

code \ model	14	17	20	25	32	40	45
ØA h7	70	80	90	110	142	170	190
ØB	54	64	75	90	115	140	160
ØC h7	36	45	50	60	85	100	120
ØD h7	74	84	95	115	147	175	195
ØE h7	6	8	10	14	14	16	19
J	-	-	8.2	11	11	13	15.5
K JS9	-	-	3	5	5	5	6
M	-	-	M3	M5	M5	M5	M6
N	-	-	8	12	12	12	12
ØO	44	54	62	77	100	122	140
Pn	8	16	16	16	16	16	12
P	M3	M3	M3	M4	M5	M6	M8
Q	5	5.5	6	7	8	10	10
ØR	3.5	3.5	3.5	4.5	5.5	6.6	9
S	11.5	12	13.5	15.5	20.5	25	28
Tn	4	4	4	4	4	4	4
T	M3	M3	M3	M3	M4	M5	M5
ØU	64	74	84	102	132	158	180
Vn	8	12	12	12	12	12	18
ØV	3.5	3.5	3.5	4.5	5.5	6.6	6.6
Wn	4	4	4	4	4	6	6
Wn	M3	M3	M3	M3	M4	M4	M4
L1	50.5	56	63.5	72.5	84.5	100	108
L2	33	36	39.5	43.5	53.5	64	78
L3	2.5	3	3	3	5	5	7
L4	20.5	23	25	26	32	38	42
L5	9	10	10.5	10.5	12	14	15
L6	14	16	20	25	25	30	30
L7	11	12	16.5	22.5	22.5	27.5	28
L8	5.5	7.5	-	-	-	-	-
α°	30	18	22.5	22.5	22.5	22.5	30
β°	30	18	11.5	11.5	11.5	11.5	15
γ°	45	30	30	30	30	30	20
θ°	22.5	15	15	15	15	15	10

RCSD/RCSD-ST Series of Harmonic reducer

RCSD Series

RCSD is a ultra thin cup shaped structure design, the whole machine adopts an ultra-flat structure, light in weight and small in size, which is very suitable for use in robot joints, aerospace industry, and semiconductor Industry.

RCSD - ST Series

RCSD-ST is a ultra thin cup shaped structure design. The advantages in size and weight will be more obvious than RCSD.

RCSD/RCSD-ST Series of Harmonic reducer

Start Torque of RCSD series（cNm）						
Ratio \ Model	14	17	20	25	32	40
50	4.5	6.5	8.5	16	32	56
80	3.5	4.5	5.5	10	20	38
100	3.2	3.5	5	9	19	32
120	-	3.5	4	8	16	30
160	-	-	3.8	7	15	25

Start Torque of RCSD-ST series（cNm）						
Ratio \ Model	14	17	20	25	32	40
50	4.5	6.5	8.5	16	32	56
80	3.5	4.5	5.5	10	20	-
100	3.2	3.5	5	9	19	32
120	-	3.5	4	8	16	-
160	-	-	3.8	7	15	25

Rigidity of RCSD-ST series（× 10^4N·m/rad）							
Ratio \ Model		14	17	20	25	32	40
50	K1	0.28	0.64	1.05	1.90	4.47	8.80
	K2	0.35	0.84	1.24	2.57	5.80	11.00
	K3	0.45	1.14	1.90	3.52	7.98	15.00
80 and above	K1	0.38	0.80	1.24	2.57	5.80	11.00
	K2	0.42	0.89	1.62	3.52	7.41	14.00
	K3	0.58	1.24	2.38	4.47	10.45	20.00

RCSD/RCSD-ST Series of Harmonic reducer

Buckling torque（Nm）						
Model	14	17	20	25	32	40
All ratio	190	330	560	1000	2200	4300

Pawl torque（Nm）						
Model / Ratio	14	17	20	25	32	40
50	88	150	220	450	980	1800
80	110	200	350	680	1400	2100
100	84	160	260	500	1000	2100
120	-	120	240	470	980	2100
160	-	-	220	450	980	1800

Hysteresis loss（arc min）						
Model / Ratio	14	17	20	25	32	40
50	2.5	1.5	1.5	1.5	1.5	1.5
80 and above	2	1	1	1	1	1

RCSD/RCSD-ST Series of Harmonic reducer

Model	Reduction Ratio	Rated torque at 2000r/min	Allowable peak torque at start and stop	Allowable average torque	Allowable Max. Momentary torque	Max. input Speed	Allowable average input speed	Back lash (arc sec)	Transmission accuracy (arc sec)	Noise (Db)
		Nm	Nm	Nm	Nm	r/min	r/min	≤	≤	≤
14	50	3.5	11.4	4.6	23	8000	3500	20	90	60
	80	5.1	15	6.2	29			20	90	60
	100	5.1	18	7.3	33			20	90	60
17	50	10.4	22	17	46	7000	3500	20	90	60
	80	14	29	21	54			20	90	60
	100	15	35	26	67			20	90	60
	120	15	35	26	67			20	90	60
20	50	16	37	23	66	6000	3500	20	60	60
	80	23	49	28	78			20	60	60
	100	27	54	32	90			20	60	60
	120	27	57	32	90			20	60	60
	160	27	61	32	90			20	60	60
25	50	26	66	36	121	5500	3500	20	60	60
	80	42	91	62	157			20	60	60
	100	45	104	71	175			20	60	60
	120	45	111	71	187			20	60	60
	160	45	118	71	195			20	60	60
32	50	50	143	71	255	4500	3500	20	60	60
	80	79	202	126	350			20	60	60
	100	91	221	144	399			20	60	60
	120	91	235	144	423			20	60	60
	160	91	240	144	435			20	60	60
40	50	91	267	130	456	4000	3000	20	60	60
	100	176	387	247	665			20	60	60
	160	196	430	300	727			20	60	60

RCSD Series of Harmonic reducer

RCSD - I series drawings

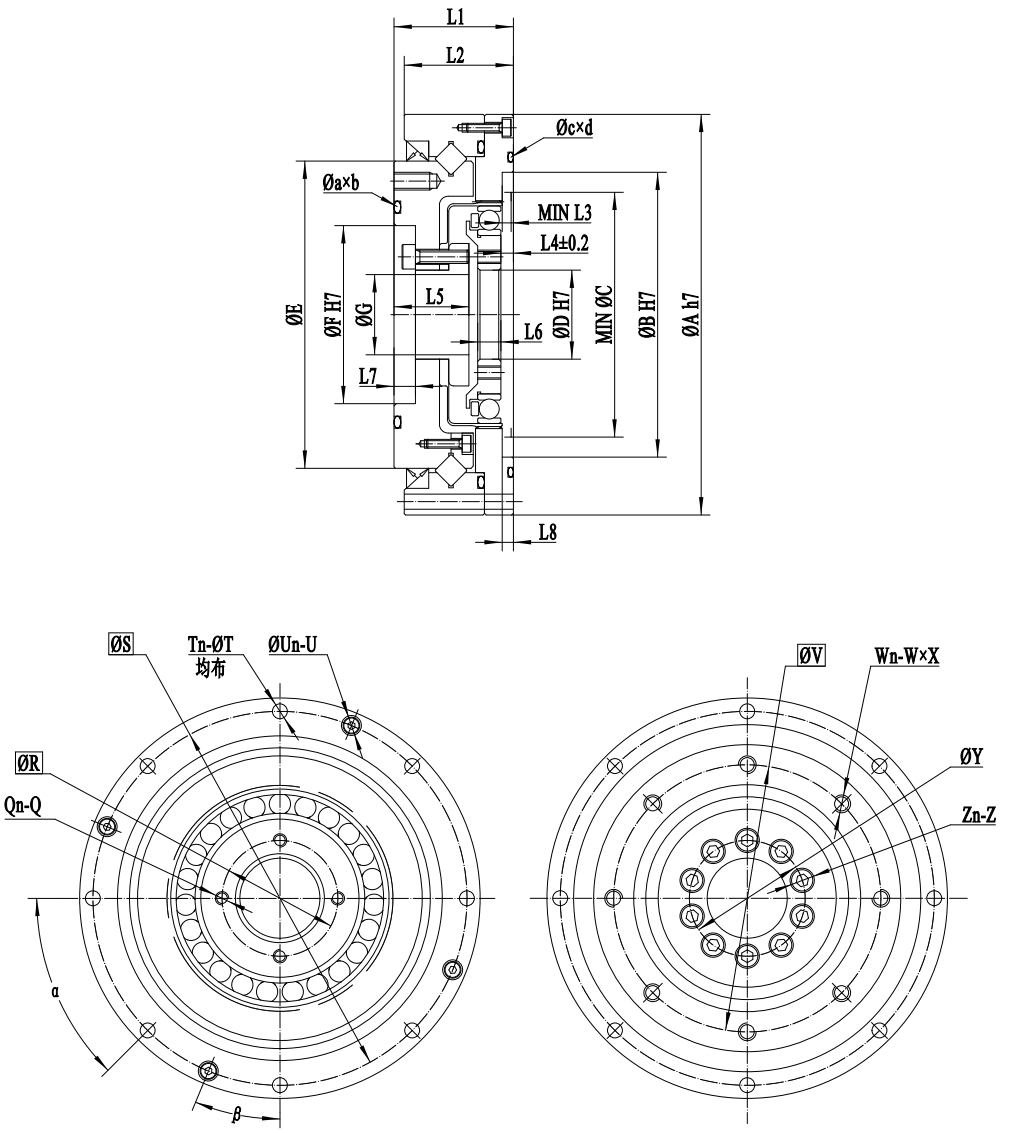

RCSD Series of Harmonic reducer

RCSD - I Parameter Table

code \ model	14	17	20	25	32	40
ØA h7	70	80	90	110	142	170
ØB h7	48	56	64	80	106	132
MIN ØC	38	46	55	67	86	105.5
ØD H7	11	15	20	24	32	40
ØE	49	59	69	84	110	132
ØF H7	30	34	40	52	70	80
ØG	9	9	18	22	29	27
Qn	4	4	4	4	4	4
Q	M3	M3	M3	M3	M4	M5
ØR	17	21	26	30	40	50
ØS	64	74	84	102	132	158
Tn	6	8	8	10	10	10
ØT	3.5	3.5	3.5	4.5	5.5	6.6
Un	4	4	4	5	5	5
U	M2	M2	M2	M3	M4	M4
ØV	42	50	60	73	96	116
Wn	8	12	8	8	8	12
W	M3	M3	M4	M5	M6	M6
X	5	6	8	8	10	10
ØY	17	19.5	26	32	42	52
Zn	6	8	12	12	12	12
Z	M3	M4	M3	M4	M5	M6
L1	22	22.7	26.8	31.5	37	45
L2	21.5	22.2	24.5	29.4	34.2	38.5
MIN L3	2	2	2	2	2	2.5
L4±0.1	2.8	2.8	2.8	3.4	3.5	3.6
L5	12.9	13.4	16.8	19.5	22	27
L6	4	5	5.2	6.3	8.6	10.3
L7	4.9	5.4	4.8	5.5	6	4
L8	2.5	2.5	2.5	3	3	3
Øa	34	38	46	59	79	98
b	0.8	1.5	2	1.5	2	2
Øc	50	59	69	85	111.2	138
d	1.5	1.5	1.5	1.2	1.9	2
α°	30	45	45	36	36	36
β°	30	22.5	22.5	18	18	18

RCSD-I-ST Series of Harmonic reducer

RCSD-I-ST series drawings

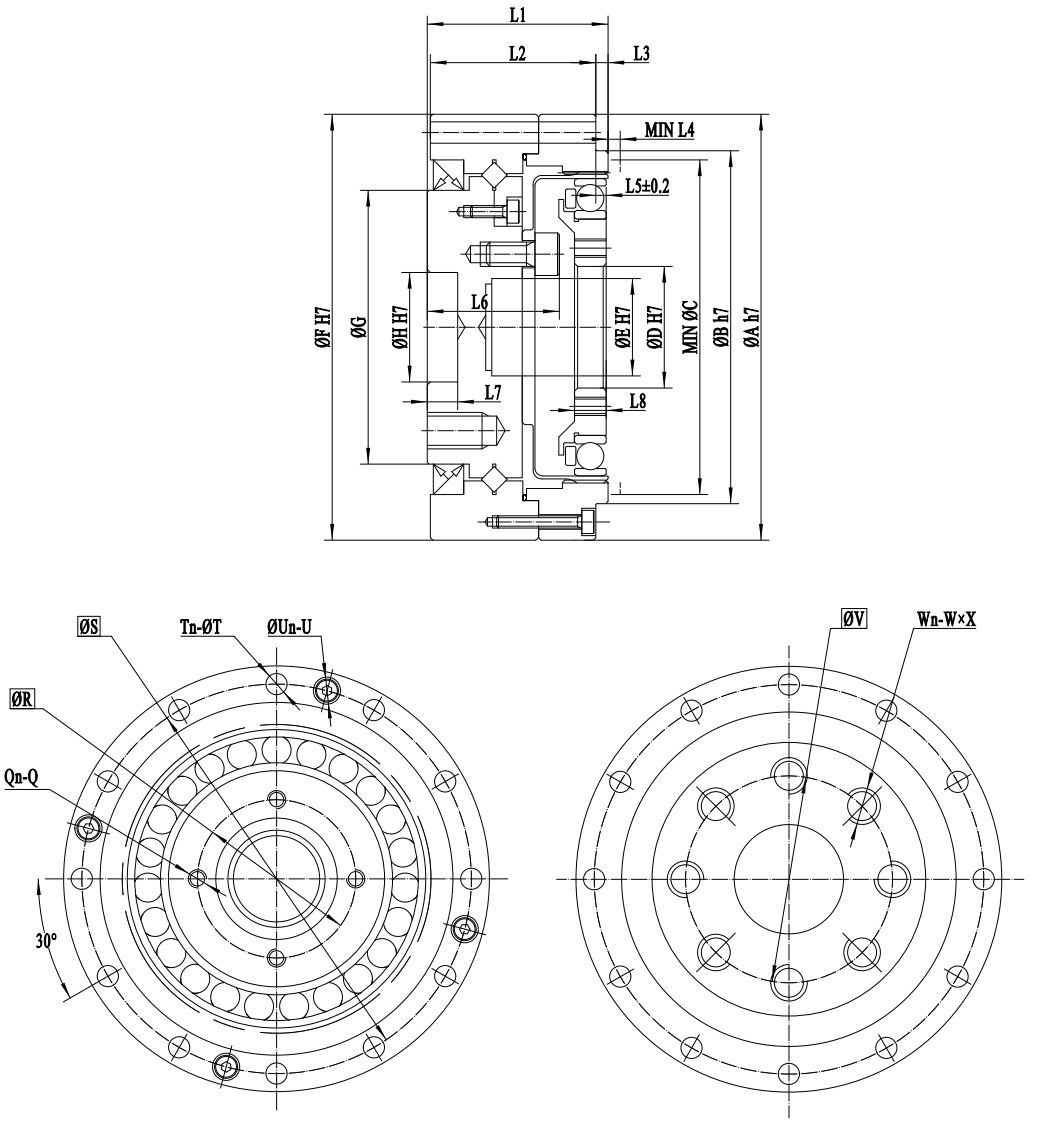

RCSD-I-ST Series of Harmonic reducer

RCSD-I-ST Parameter Table

code \ model	14	17	20	25	32	40
ØA h7	55	62	70	85	112	126
ØB h7	42.5	49.5	58	73	96	108.5
MIN ØC	38	46	55	67	86	106
ØD H7	11	15	20	24	32	40
ØE H7	11	11	166	20	30	32
ØF H7	55	62	70	85	112	126
ØG	31	38	45	58	78	90
ØH H7	12	14	18	24	32	36
Qn	4	4	4	4	4	4
Q	M3	M3	M3	M3	M4	M5
ØR	17	21	26	30	40	50
ØS	49	56	64	79	104	117.5
Tn	6	10	12	18	15	20
ØT	3.5	3.5	3.5	3.5	4.5	5.5
Un	3	5	4	6	6	6
U	M2	M2	M2	M2	M2	M3
ØV	25	27	34	42	57	72
Wn	10	8	8	8	10	10
W	M3	M5	M6	M8	M8	M10
X	7	8	9	12	12	15
L1	25	26.5	29.7	37.1	43	51.7
L2	22.5	24	27.2	33.6	39	46.7
L3	2	2	2	3	3	4
MIN L4	2.8	2	2	2	2	2.5
L5±0.1	1.7	1.7	1.7	2.6	2.5	3.4
L6	18.4	19.7	21.7	27.1	29.5	35.7
L7	5	5	5	5.5	5.5	6
L8	4	5	5.2	6.3	8.6	10.3
α°	30	36	30	20	20	20
β°	30	18	15	10	10	10

RHSD Series of Harmonic reducer

RHSD-I Series

RHSD-I is a ultra thin hollow flanged shaped structure design, small in size and light in weight, which is very suitable for the use in the tight-space occasions.

RHSD-III Series

RHSD-III is a ultra thin hollow flanged shaped structure design. The wave generator's center is a hollow shaft, which is very suitable for the use in tight-space requirement and threading occasions.

RHSD Series of Harmonic reducer

Pull-in torque（cNm）						
Ratio \ Model	14	17	20	25	32	40
50	4.5	6.5	8.5	16	32	56
80	3.5	4.5	5.5	10	20	38
100	3.2	3.5	5	9	19	32
120	-	3.5	4	8	16	30
160	-	-	3.8	7	15	25

RHSD rigidity（× 10^4N·m/rad）							
Ratio \ Model		14	17	20	25	32	40
50	K1	0.28	0.64	1.05	1.90	4.47	8.80
	K2	0.35	0.84	1.24	2.57	5.80	11.00
	K3	0.45	1.14	1.90	3.52	7.98	15.00
80 and above	K1	0.38	0.80	1.24	2.57	5.80	11.00
	K2	0.42	0.89	1.62	3.52	7.41	14.00
	K3	0.58	1.24	2.38	4.47	10.45	20.00

RHSD Series of Harmonic reducer

Buckling torque（Nm）						
Model	14	17	20	25	32	40
All ratio	130	260	470	850	1800	3600

Pawl torque（Nm）						
Model / Ratio	14	17	20	25	32	40
50	88	150	220	450	980	1800
80	110	200	350	680	1400	2100
100	84	160	260	500	1000	2100
120	-	120	240	470	980	2100
160	-	-	220	450	980	1800

Hysteresis loss（arc min）						
Model / Ratio	14	17	20	25	32	40
50	2.5	1.5	1.5	1.5	1.5	1.5
80 and above	2	1	1	1	1	1

RHSD Series of Harmonic reducer

Model	Reduction Ratio	Rated torque at 2000r/min	Allowable peak torque at start and stop	Allowable average torque	Allowable Max. Momentary torque	Max. input Speed	Allowable average input speed	Back lash (arc sec)	Transmission accuracy (arc sec)	Noise (Db)
		Nm	Nm	Nm	Nm	r/min	r/min	≤	≤	≤
14	50	3.5	11.4	4.6	23	8000	3500	20	90	60
	80	5.1	15	6.2	29			20	90	60
	100	5.1	18	7.3	33			20	90	60
17	50	10.4	22	17	46	7000	3500	20	90	60
	80	14	29	21	54			20	90	60
	100	15.2	35	26	67			20	90	60
	120	15.2	35	26	67			20	90	60
20	50	16.1	37	23	66	6000	3500	20	60	60
	80	23	49	28	78			20	60	60
	100	27	54	32	90			20	60	60
	120	27	57	32	90			20	60	60
	160	27	60	32	90			20	60	60
25	50	26	66	36	121	5500	3500	20	60	60
	80	42	91	62	157			20	60	60
	100	45	105	71	175			20	60	60
	120	45	111	71	187			20	60	60
	160	45	118	71	190			20	60	60
32	50	50	143	71	255	4500	3500	20	60	60
	80	79	202	126	350			20	60	60
	100	91	221	144	399			20	60	60
	120	91	235	144	423			20	60	60
	160	91	250	144	423			20	60	60
40	50	91	267	130	456	4000	3000	10	60	60
	100	176	387	247	665			10	60	60
	160	196	430	300	727			10	60	60

RHSD Series of Harmonic reducer

RHSD-I series drawings

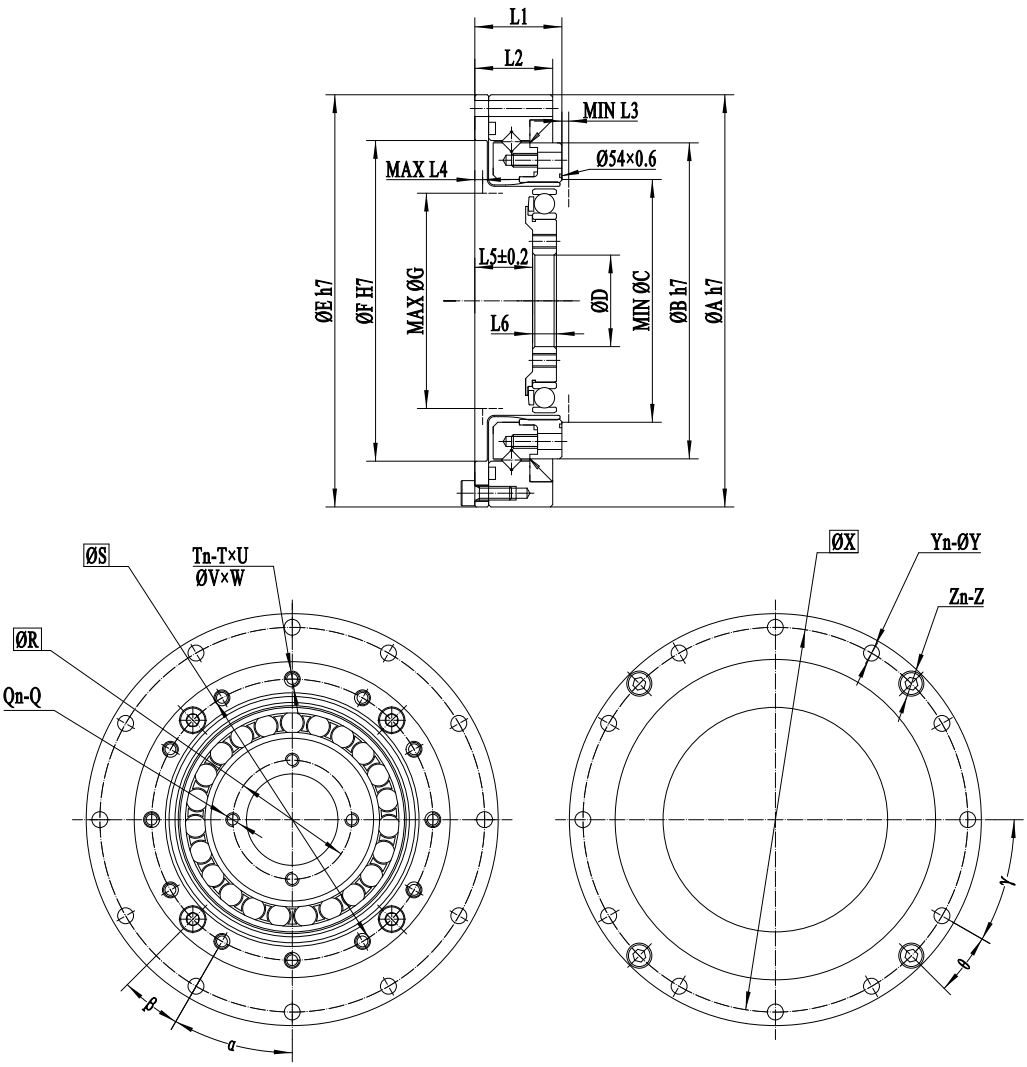

RHSD Series of Harmonic reducer

RHSD-I Parameter Table

code \ model	14	17	20	25	32	40
ØA h7	70	80	90	110	142	170
ØB h7	49	59	69	84	110	132
MIN ØC	36.5	45	53	66	86	106
ØD	11	15	20	24	32	40
ØE h7	70	80	90	110	142	170
ØF H7	50	61	70	88	114	140
MAX ØG	31	39	47	58	76	90
Qn	4	4	4	4	4	4
Q	M3	M3	M3	M3	M4	M5
ØR	17	21	26	30	40	50
ØS	43	52	61.4	76	99	120
Tn	8	12	12	12	12	12
T	M3	M3	M3	M4	M5	M5
U	4.5	6	5	6	5.5	5.5
ØV	3.5	3.5	3.5	4.5	5.5	5.5
W	5	5.5	5.5	6	10	11
ØX	64	74	84	102	132	158
Yn	8	12	12	12	12	12
ØY	3.5	3.5	3.5	4.5	5.5	6.6
Zn	4	4	4	4	4	4
Z	M3	M3	M3	M3	M4	M5
L1	17.5	18.5	16	22	27.9	33
L2	15.5	16.5	17	20	23.6	28
MIN L3	1.5	1.5	1.5	2	2.5	2.5
MAX L4	1.2	1.7	1.7	1.9	2.1	2.2
L5±0.1	11.5	11.9	12.6	15.3	18.7	21.1
L6	4	5	5.2	6.3	8.6	11.1
Øa	36.6	45	54	66	87	106
b	0.6	0.8	0.6	1	1.5	1.5
α°	45	30	30	30	30	30
β°	15	15	15	15	15	15
γ°	45	30	30	30	30	30
θ°	22.5	12	15	15	15	15

RHSD Series of Harmonic reducer

RHSD-III series drawings

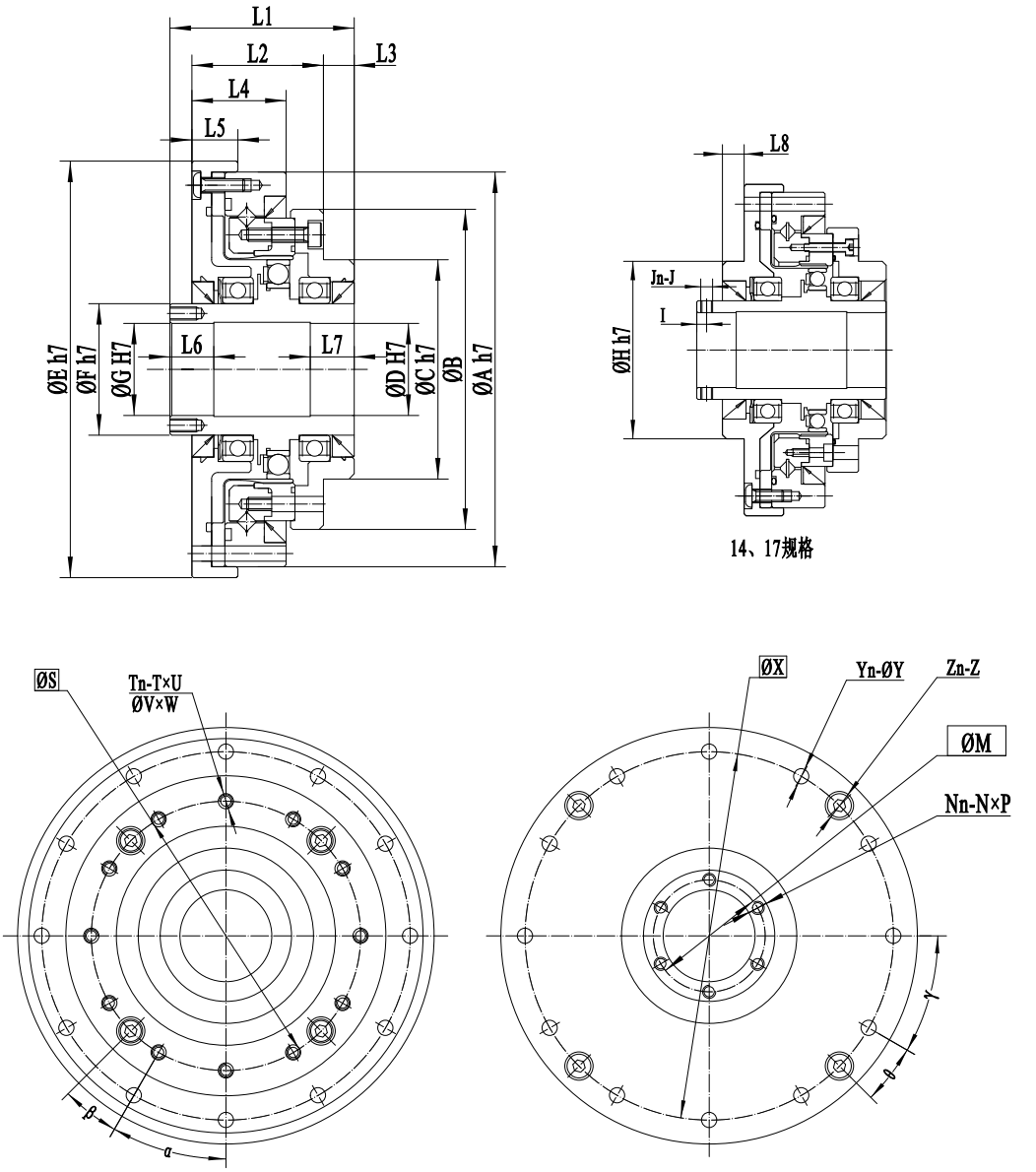

RHSD Series of Harmonic reducer

RHSD-III Parameter Table

code \ model	14	17	20	25	32	40
ØA h7	70	80	90	110	142	170
ØB	54	62	73	87	115	137
ØC h7	36	45	50	60	85	100
ØD H7	14	19	21	29	36	51
ØE h7	74	84	95	115	147	175
ØF h7	20	25	30	38	45	65
ØG H7	14	19	21	29	36	51
ØH h7	36	45	-	-	-	-
I	2.5	2.5	-	-	-	-
Jn	3	3	-	-	-	-
J	M3	M3	-	-	-	-
ØM	-	-	25.5	33.5	40.5	57
Nn	-	-	6	6	6	6
N	-	-	M3	M3	M3	M4
P	-	-	6	6	6	8
ØS	43	52	61.4	76	99	120
Tn	8	12	12	12	12	12
T	M3	M3	M3	M4	M5	M6
U	5	5.5	6	6	5.5	6.6
ØV	3.5	3.5	3.5	4.5	5.5	5.5
W	5.5	5.5	11.5	13.5	20.4	21
ØX	64	74	84	102	132	158
Yn	8	12	12	12	12	12
ØY	3.5	3.5	3.5	4.5	5.5	6.6
Zn	4	4	4	4	4	6
Z	M3	M3	M3	M3	M4	M5
L1	44	48	42	46.5	55	65
L2	27	29	30	33.5	42.5	48
L3	6	7	7	7	5.5	9
L4	19.5	20.5	21.5	24	28.6	33
L5	9	10	10.5	10.5	12	14
L6	10	10	10	10	11	12
L7	10	10	10	10	14.5	16
L8	5.5	5.5	-	-	-	-
α°	45	30	30	30	30	30
β°	15	15	15	15	15	15
γ°	45	30	30	30	30	30
θ°	22.5	12	15	15	15	15

REACH® 瑞迪智驱
TOP 价值源于核心技术

Phone: 400-090-7210

Site: www.reachgroup.cn

Add：四川省成都市双流区西航港大道中四段909号

Add: NO.909 Middle Section 4, West AirportAve, Southwest Airport Economic Development Zone, Shuangliu Region, Chengdu, Sichuan Province China

版本号：ZH-20221016