REACH

Harmonic Reducer

Quiet Harmonic Reducer
Choose REACH

Reach Machinery Co., Ltd.

To Become the Preferred Brand of Global Customers

301596.SZ

CONTENTS

Product Selection Process

Wave Generator Structure

The Wave Generator includes both the self-aligning cross slider structure and the non-self-aligning integrated structure. For more details, please refer to the outline drawings of each series.

The basic structure and shape of the Wave Generator are as shown below.

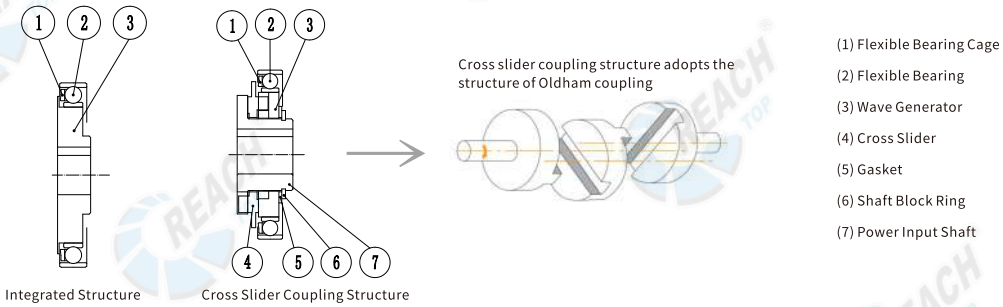

(1) Flexible Bearing Cage
(2) Flexible Bearing
(3) Wave Generator
(4) Cross Slider
(5) Gasket
(6) Shaft Block Ring
(7) Power Input Shaft

Service Life of Harmonic Reducer

The service life of a Harmonic Reducer mainly depends on the service life of Wave Generator flexible bearing and the fatigue life of the Flexspline. The fatigue life of Flexspline is determined by the bending cycles.

Service Life of Wave Generator Flexible Bearing

	Service life
Series specifications	RCSG, RHSG
L_{90} Rated service life at 90% reliability	10000h
L_{50} Rated service life at 50% reliability	50000h

Note:The table data represents the service life under rated operating conditions (e.g., rated rotation speed, rated torque, etc.).

$$L = L_n * \left(\frac{T_e}{T_{C}av}\right)^3 * \left(\frac{n_e}{n_{R}av}\right)$$

L : Service life of the Wave Generator flexible bearing under actual operating conditions /h

L_n : L_{90} or L_{50} service life /h

T_e : Rated torque for provisional specifications /N·m

n_e : Rated speed for provisional specifications /(r/min)

$T_{C}av$: Average load torque on output side /N·m

$n_{R}av$: Average input rotational speed /(r/min)

Fatigue Life of Flexspline

Flexspline bends 2 times with 1 rotation of Wave Generator, the bending limit is 1.0×10^4.

$$N\,max = \frac{1.0 \times 10^4}{2 \times \frac{n_{bz}}{60} \times t_z}$$

$N\,max$: Allowable number of impact torques / Times

n_{bz}: Speed of the Wave Generator (input side) under impact torque /(r/min)

t_z: Duration of impact torque application /s

Product Selection Process

Confirmation of Client-Side Load Torque Modes

Relevant Parameters For Each Load Torque Mode

Normal operating mode		Maximum rotational speed (determined by the input motor)		Impact torque		Required service life
Startup	T_1、t_1、n_1	Maximum output rotational speed	$n_{C}max$	Impact torque applied	T_z t_z n_z	$L = L_{90}$
Normal operation	T_2、t_2、n_2	Maximum input rotational speed	$n_{R}max$			
Stop / Deceleration	T_3、t_3、n_3	/	/			
Shutdown	T_4、t_4、n_4	/	/			

Load torque mode diagram

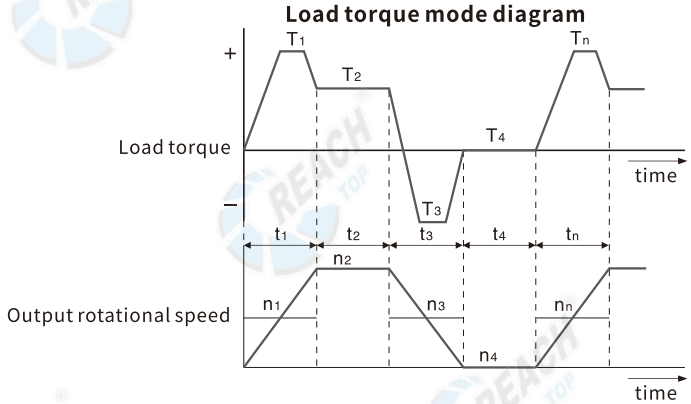

Note: n_1、n_2、n_3 and n_n indicate the average values.

Coding Rules

RHSG – 25 – 50 – Structure – Special Specifications

① ② ③ ④ ⑤

① Flexspline Shape:
R:First Letter of REACH Machinery; H:Hat-shaped Flexspline; C:Cup-shaped Flexspline; S:Standard Flexspline; D:Short Cylindrical Flexspline; G:High Torque.

② Flexspline Pitch Circle Diameter Specifications

Model	14	17	20	25	32	40
Harmonic Gear Pitch Diameter	35.6	43.2	50.8	63.5	81.3	101.6

③ Reduction Ratio of the Harmonic Reducer.

④ The structure of a Harmonic Reducer can be divided into two types: Cup-shaped and Hat-shaped.

Style \ Model	Cup	Hat
Ⅰ	Standard Combined Mode (Integrated Wave Generator)	Simple Combined Mode (Integrated Wave Generator)
Ⅱ	Standard Combined Mode (Cross slider Wave Generator)	Simple Combined Mode (Cross Slider Wave Generator)
Ⅲ	Component Mode (Three-Component-Based Mode)	Combined Mode(Standard Mode)
Ⅳ	—	Combined Mode(Output shaft)

⑤ Refers to specifications with special shape, performance and interface dimensions. A blank designation indicates a standard product, and "SP" indicates a special product.

Product Selection Process

Product Model Selection Flowchart

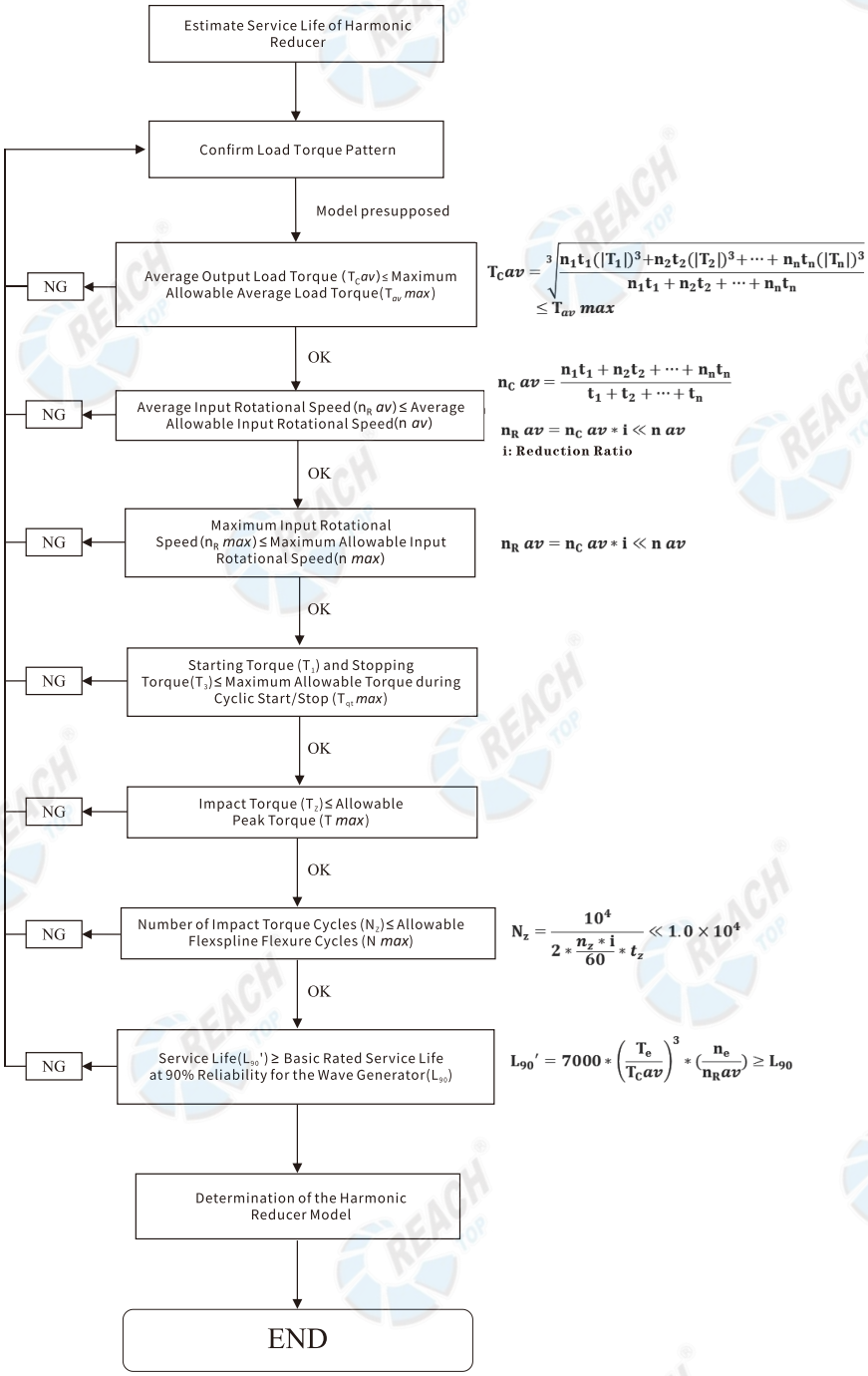

Installation Instructions

RHSG Series Installation Configuration 1 (Circular Spline Fixed, Flexspline as Output)

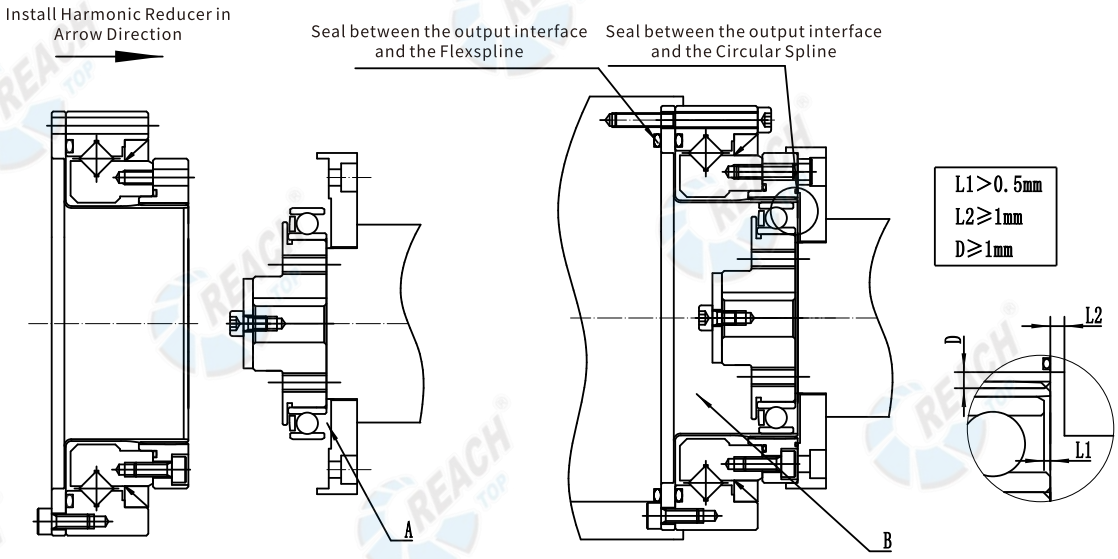

RHSG Series Installation Configuration 2 (Flexspline Fixed, Circular Spline as Output)

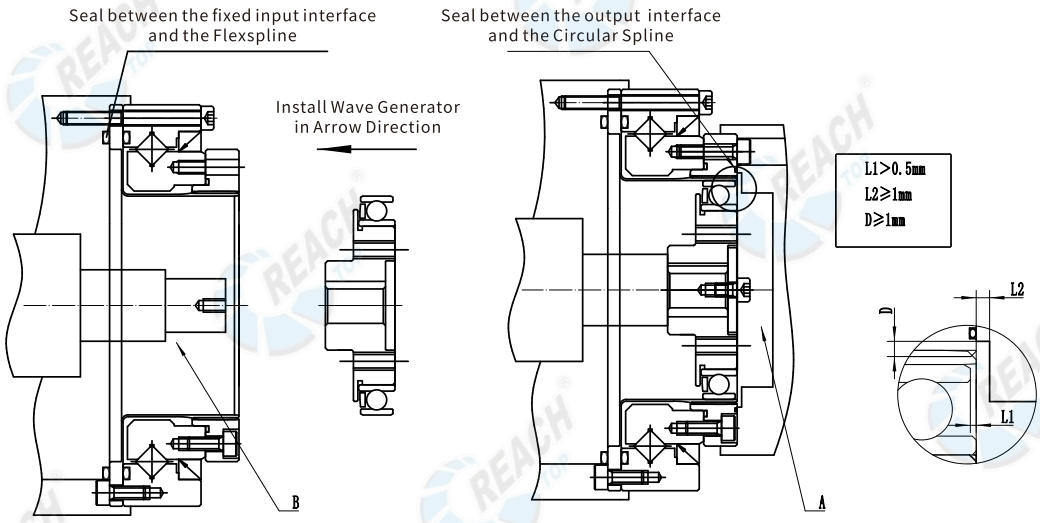

Installation Instructions

RCSG Series Installation Configuration (Circular Spline Fixed, Flexspline as Output)

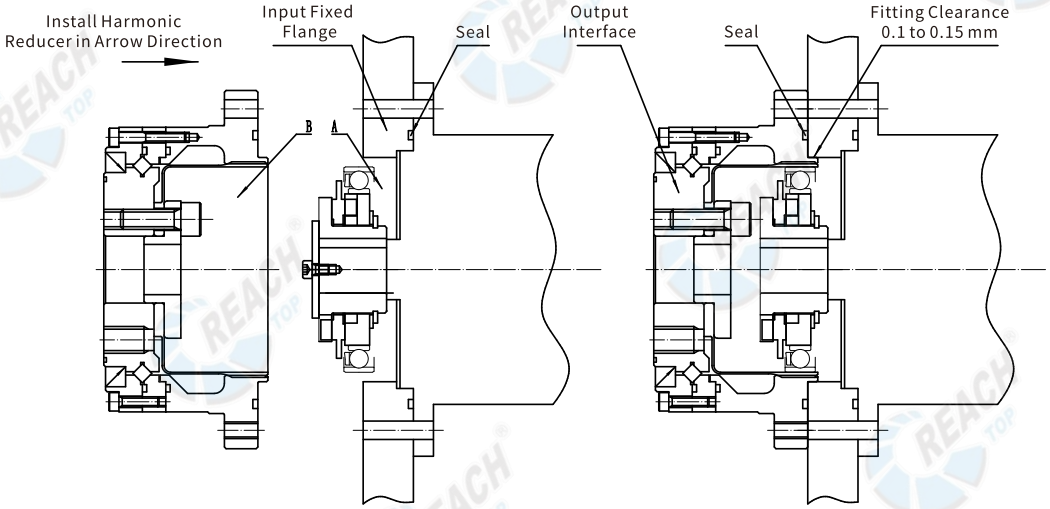

Common Wave Generator Mounting Methods

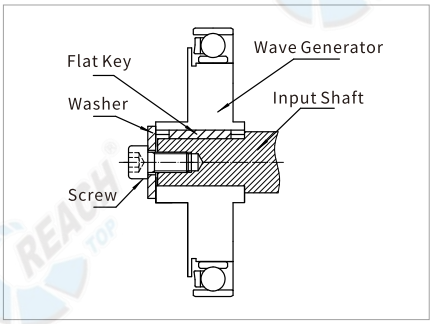

1.Input shaft with shoulder (incorporating flat key) directly affixed to Wave Generator.

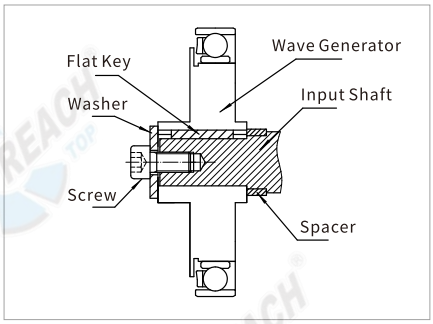

2.Input shaft with shoulder and overlength (incorporating flat key) affixed to Wave Generator via spacer (spacer with 0.01mm parallelism between end faces).

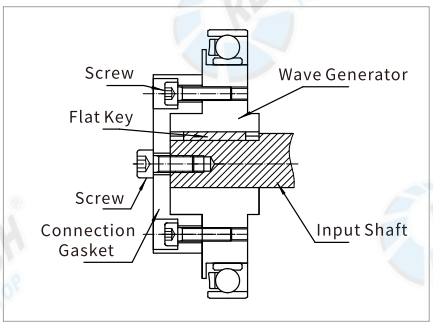

3.Input shaft without shoulder (incorporating flat key) affixed to Wave Generator via gasket and screws.

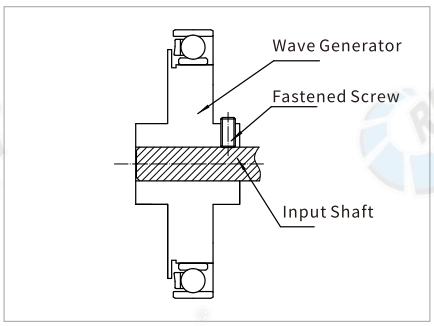

4.For small-size Harmonic Reducers, the installation method generally involves inserting the input shaft without shoulder into the Wave Generator, subsequently affixing it to the Wave Generator via set screws.

Installation Instructions

Installation Steps and Precautions

After assembling and positioning the Circular Spline and Flexspline, proceed with Wave Generator installation. Incorrect assembly procedures may lead to gear tooth misalignment, potentially causing tooth surface damage and other related complications.

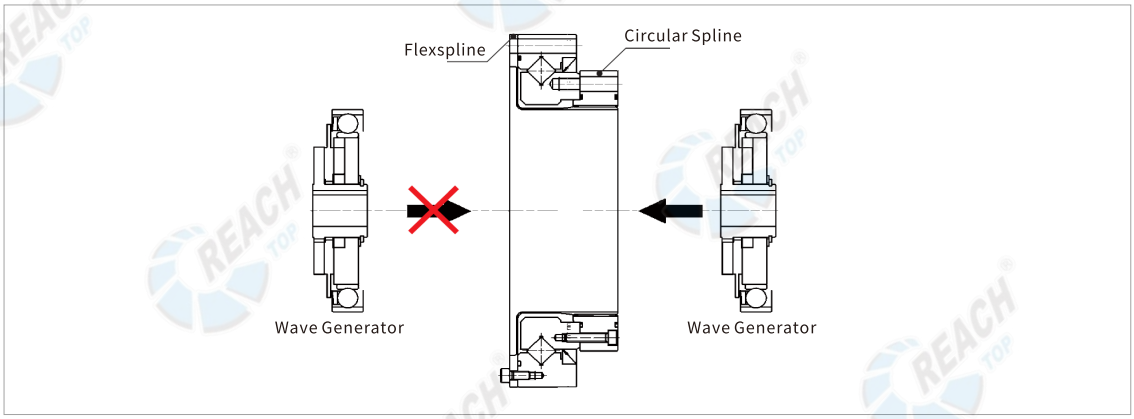

Installation Accuracy

To fully leverage the excellent performance inherent in component type Harmonic Reducers, please ensure the installation accuracy as follows.

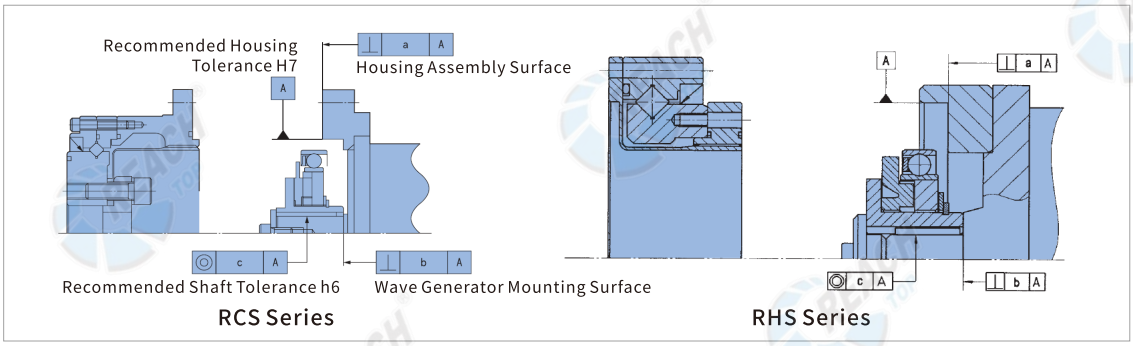

Recommended Housing Installation Accuracy

Symbol \ Model	14	17	20	25	32
a	0.011	0.015	0.017	0.024	0.026
b	0.008	0.01	0.01	0.012	0.012
	(0.017)	(0.02)	(0.02)	(0.024)	(0.024)
c	0.016	0.018	0.019	0.022	0.022
	(0.03)	(0.034)	(0.044)	(0.047)	(0.05)

Note: Dimensions b and c pertain to the Wave Generator, with parenthetical values indicating those for the Cross Slider Type (Type II) Wave Generator.

Appendix Table 1: Recommended Dimensions for O-rings and O-ring Grooves in Harmonic Reducer Assembly

Model	Specifications	Flexspline side				Circular Spline side			
		Recommended O-ring dimensions (ID·CS) /mm	Recommended O-ring groove dimensions /mm			Recommended O-ring dimensions (ID·CS) /mm	Recommended O-ring groove dimensions /mm		
			ΦD1	L1	L2		ΦD2	L3	L4
RHSG	14	52·1.5	55	1.2	1.75	36.6·0.6	38	0.75	0.45
	17	61·1.5	64.5	1.2	2	45·1	48	1.25	0.75
	20	69·1.5	74	1.2	2	54·1	56.2	1.2	0.75
	25	90·1.8	94.6	1.4	2.4	67·1.5	70.5	1.85	1.2
	32	116·2	120.5	1.5	2.5	87·1.5	92	2	1.1
RHSD	14	54.5·1.2	57	0.9	2	The O-ring groove in the RHSD series is integrated into the Circular Spline component			
	17	64·1.5	68.1	1.2	2				
	20	72·2	78	1.5	2.7				
	25	89·1.8	94.8	1.4	2.4				
	32	117·2	123	1.5	2.7				

Note: In case of doubt, please contact us for further clarification.

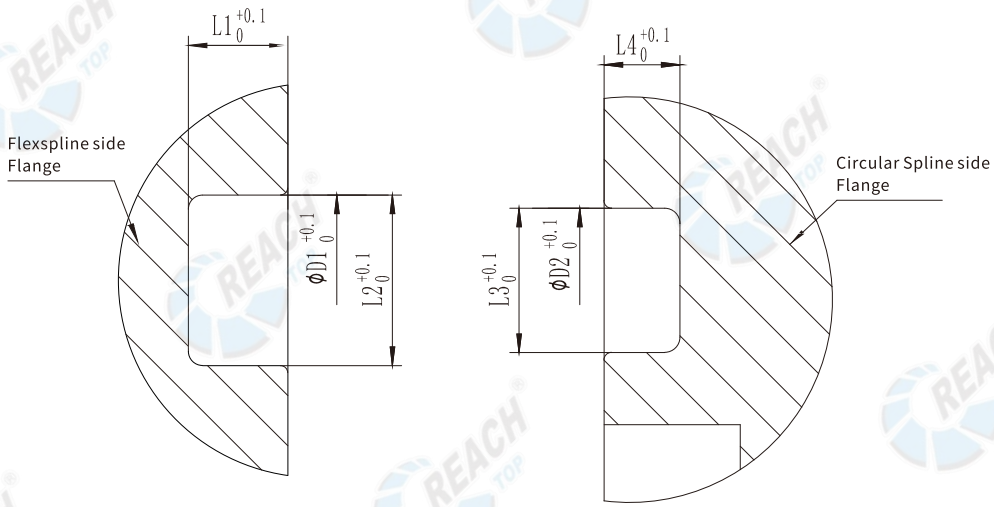

Note: D1 and D2 are both external dimensions.

Appendix Table 2: Recommended Gasket Dimensions of Hub for RCSG-I and RHSG-I Series Harmonic Reducers

Model	ΦD1	ΦD2	ΦD3	ΦD4	Φd1	Φd2	X	L1	L2	L3	Screw
14	26	14	19	Customized based on actual application conditions	5	2.4	4	3	5.8	1.8	M2*6
17	30	16	23		5	2.4	4	3	5.8	3.9	M2*6
20	37	20	27		5	3	4	3	5.8	4.2	M2.5*6
25	45	22	35		5	3	4	4.5	7.6	4.8	M2.5*6
32	50	30	38		6	3.5	4	5	7.6	2.8	M3*6

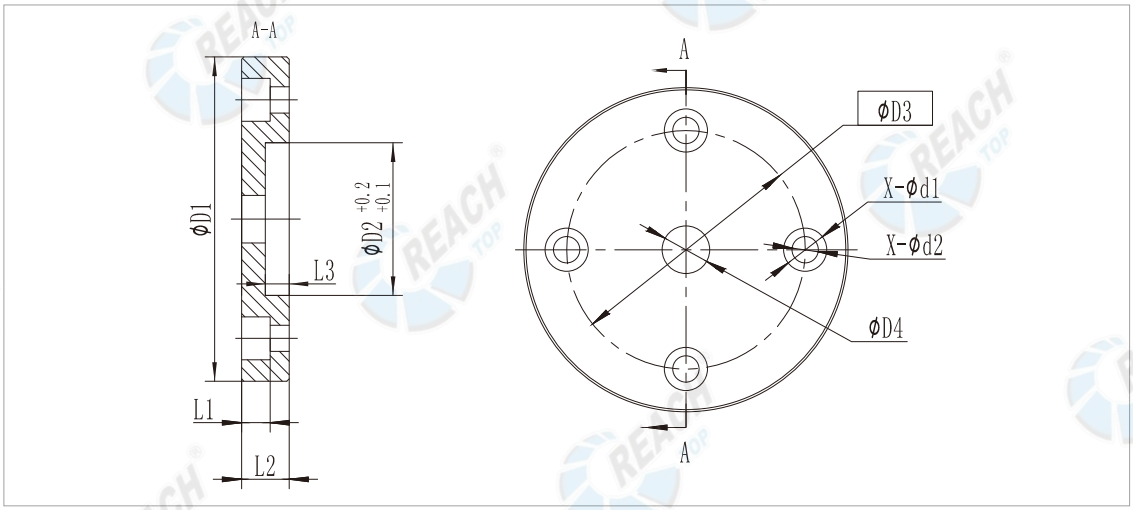

Appendix Table 3: Recommended Tightening Torque for Screws

Screw grade	Grade 12.9							
Nominal thread diameter	mm	3	4	5	6	8	10	12
Tightening torque	N·m	2	4	9	15	35	70	125

Appendix Table 4: Flexspline Cavity Volume for Type I/II Harmonic Reducers

Model numbers	Flexspline cavity volume /ml	Model numbers	Flexspline cavity volume /ml	Model numbers	Flexspline cavity volume /ml	Model numbers	Flexspline cavity volume /ml	Model numbers	Flexspline cavity volume /ml
RHSG-14	19	RCSG-14	14	RCSD-14	3.5	RCSD-14-ST	5	RHSD-14	14
RHSG-17	32	RCSG-17	22	RCSD-17	5	RCSD-17-ST	7.5	RHSD-17	21.5
RHSG-20	45	RCSG-20	34	RCSD-20	7	RCSD-20-ST	12	RHSD-20	34
RHSG-25	85	RCSG-25	65	RCSD-25	16	RCSD-25-ST	24	RHSD-25	63
RHSG-32	175	RCSG-32	140	RCSD-32	33	RCSD-32-ST	51.5	RHSD-32	125

RCSG Series of Harmonic Reducer

RCSG-I Series

RCSG-I is standard cup-shaped structure. The input shaft is directly matched with the Wave Generator's inner bore by a flat key. Generally, the Circular Spline is fixed, and the Flexspline sets as output.

RCSG-II Series

RCSG-II is standard cup-shaped structure. The input shaft is connected to the Wave Generator's inner bore through an Oldham coupling. Generally, the Circular Spline is fixed, and the Flexspline sets as output.

RCSG-III Series

RCSG-III is composed of three parts: a Flexspline, a Circular Spline, and a Wave Generator. The Flexspline is standard cup-shaped structure. The input shaft is directly matched with the Wave Generator's inner bore by flat key or screws.

RCSG Series of Harmonic Reducer

Starting torque of RCSG-I/II series /cN·m							
Ratio \ Model	14	17	20	25	32	40	45
30	6.5	9.5	16	28	57	-	-
50	4.7	7	9	19	36	64	90
80	3.5	4.7	5.8	13	23	44	57
100	3	4	5	9.5	21	38	50
120	-	3.7	4.5	8.6	19	35	46
160	-	-	4	7.5	17	29	40

Starting torque of RCSG-III series /cN·m							
Ratio \ Model	14	17	20	25	32	40	45
30	4.4	6.7	11.5	20	46	-	-
50	3.7	5.7	7.4	13.5	29.5	62	70
80	2.7	3.7	4.6	8.6	19	38	45
100	2.4	3.3	4.2	7.7	18	35	40
120	-	3.1	3.7	7	15	30	36
160	-	-	3.3	6.2	14	27	32

Stiffness of RCSG series $\times 10^4$ N·m/rad								
Ratio \ Model		14	17	20	25	32	40	45
30	K1	0.19	0.34	0.57	1	2.4	-	-
	K2	0.24	0.44	0.71	1.3	3	-	-
	K3	0.34	0.67	1.1	2.1	4.9	-	-
50	K1	0.32	0.77	1.24	2.38	5.13	10.00	15.00
	K2	0.45	1.05	1.71	3.23	7.41	14.00	20.00
	K3	0.54	1.24	2.19	4.18	9.31	18.00	26.00
80 or more	K1	0.45	0.95	1.52	2.95	6.37	13.00	18.00
	K2	0.58	1.33	2.38	4.75	10.45	20.00	29.00
	K3	0.67	1.52	2.76	5.42	11.40	23.00	33.00

RCSG Series of Harmonic Reducer

Buckling torque /N·m							
Model	14	17	20	25	32	40	45
All Ratios	260	500	800	1700	3500	6700	8900

Ratcheting torque /N·m							
Model / Ratio	14	17	20	25	32	40	45
30	59	100	170	340	720	-	-
50	110	190	280	580	1200	2300	3500
80	140	260	450	880	1800	3600	5000
100	100	200	330	650	1300	2700	4000
120	-	150	310	610	1200	2400	3600
160	-	-	280	580	1200	2300	3300

Hysteresis loss /arc min							
Model / Ratio	14	17	20	25	32	40	45
30	3	3	3	3	3	-	-
50	2	2	2	2	2	2	2
80 or more	1	1	1	1	1	1	1

RCSG Series of Harmonic Reducer

Model	Ratio	Rated torque at 2000r/min	Allowable peak torque at start and stop	Allowable average torque	Allowable Max.momentary torque	Max. input speed	Allowable average input speed	Backlash (arc sec)	Transmission accuracy (arc sec)	Noise (dB)
		N·m	N·m	N·m	N·m	r/min	r/min	⩽	⩽	⩽
14	30	3.8	8.5	6.5	16	8000	3500	60	90	60
	50	6.6	23	8.6	43			20	90	60
	80	9.6	29	13.5	57			20	90	60
	100	9.6	34	13.5	66			10	90	60
17	30	8.4	15	11.5	28	7000	3500	30	90	60
	50	19.8	42	32.5	86			20	90	60
	80	27.5	53	33.5	108			20	90	60
	100	30	66	48.5	134			10	90	60
	120	30	66	48.5	107			10	90	60
20	30	14	26	19	48	6000	3500	20	60	60
	50	32	69	42	121			20	60	60
	80	42	91	58	158			20	60	60
	100	50	102	61	182			10	60	60
	120	50	108	61	182			10	60	60
	160	50	113	61	182			10	60	60
25	30	26	48	36	90	5500	3500	20	60	60
	50	48	121	68.5	230			20	60	60
	80	78	169	107.5	315			20	60	60
	100	84	194	133	351			10	60	60
	120	84	207	133	376			10	60	60
	160	84	217	133	388			10	60	60
32	30	51	95	71	190	4500	3500	20	60	60
	50	94	267	133	472			20	60	60
	80	146	376	206	702			20	60	60
	100	169	411	267	800			10	60	60
	120	169	436	267	848			10	60	60
	160	169	459	267	848			10	60	60
40	50	169	497	242	847	4000	3000	20	60	60
	80	255	641	351	1210			20	60	60
	100	328	702	460	1334			10	60	60
	120	363	762	557	1458			10	60	60
	160	363	800	557	1458			10	60	60
45	50	229	650	345	1235	3800	3000	20	60	60
	80	407	918	507	1651			20	60	60
	100	459	982	650	2041			10	60	60
	120	523	1070	806	2288			10	60	60
	160	523	1147	819	2483			10	60	60

Note: The maximum backlash of RCSG-II is 10 arc sec more.

RCSG Series of Harmonic Reducer

RCSG-I Outline Drawing

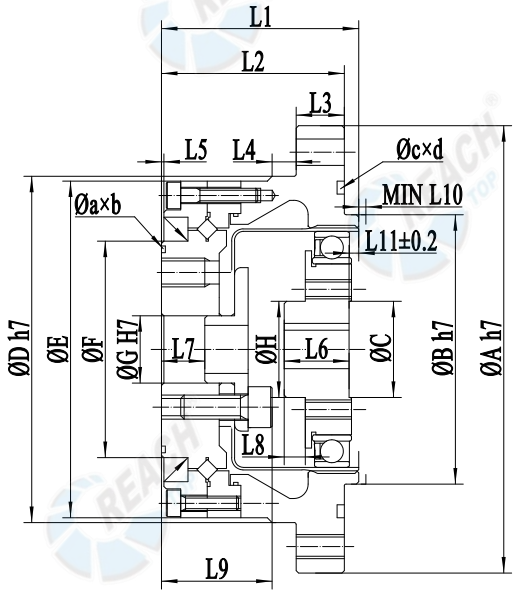

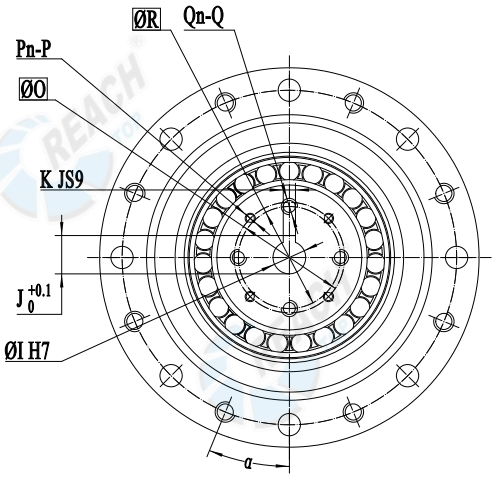

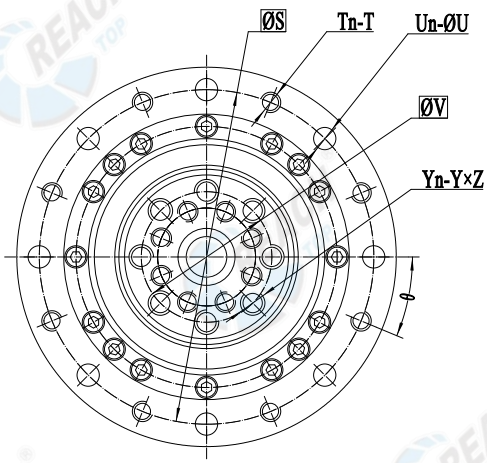

Note: L10 is the limited dimension.

RCSG Series of Harmonic Reducer

RCSG-I Dimension Table

Model / Symbol	14	17	20	25	32	40	45
ØA h7	73	79	93	107	138	160	180
ØB h7	38	48	56	67	90	110	124
ØC	22.5	27	30	40	54.5	60	75
ØD h7	56	63	72	86	113	127	148
ØE	55	62	70	85	112	126	147
ØF	31	38	45	58	78	90	107
ØG h7	11	10	14	20	26	32	32
ØH	14	16	20	22	30	32	38
ØI h7	6	8	8	14	14	14	19
J	7	9.4	9.4	16.3	16.3	16.3	21.8
K JS9	2JS9	3JS9	3JS9	5JS9	5JS9	5JS9	6JS9
ØO	19	23	27	35	38	-	-
Pn	4	4	4	4	4	-	-
P	M2	M2	M2.5	M2.5	M3	-	-
Qn	2	2	4	4	4	4	4
Q	M4	M4	M4	M5	M5	M5	M5
ØR	18	22	25	32	36	50	60
ØS	65	71	82	96	125	144	164
Tn	8	8	8	10	12	10	12
T	M4	M4	M5	M5	M6	M8	M8
Un	8	8	8	10	12	10	10
ØU	4.5	4.5	5.5	5.5	6.6	9	9
ØV	23	27	32	42	55	68	82
Yn	6	6	8	8	8	8	8
Y	M4	M5	M6	M8	M10	M10	M12
Z	12.5	12.5	12	15	18	16	18
L1	36	39	41	49	60	70.5	78
L2	34	37	38	46	57	66.5	74
L3	7	8	10	10	12	16	16
L4	3.5	4	5	5	5	5	6
L5	0.5	0.5	0.5	0.5	1	1.5	1
L6	10	12.5	13.5	14.5	16	20	20.4
L7	9.4	9.5	9	12	15	20.5	21
L8	1.8	4.7	4.7	5.5	3	4	4
L9	21.4	23.5	23	29	35.2	39.5	45.5
MIN L10	2	2	2	2	2.5	2.5	3
L11±0.2	0.5±0.2	1.2±0.2	2±0.2	3.1±0.2	3±0.2	3.6±0.2	5.2±0.2
Øa	28.5	34	40	52	69	85	-
b	0.6	0.8	1	1	1.5	1.5	-
Øc	50	55	64	79	104	142	152
d	1.5	1.5	1.5	2	2	2	2
α°	22.5	22.5	22.5	18	15	18	18

RCSG-II Outline Drawing

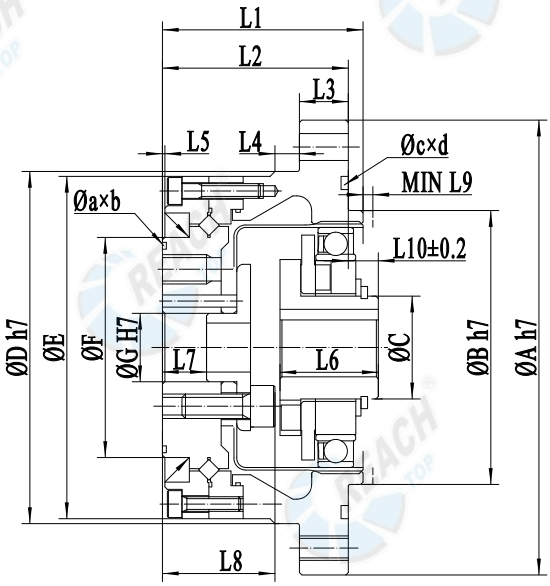

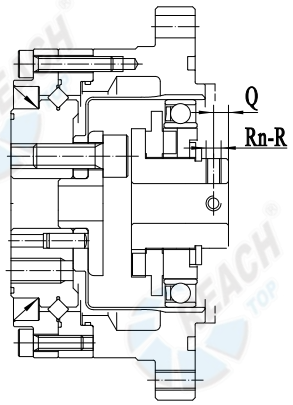

Wave Generator of model 14 and 17

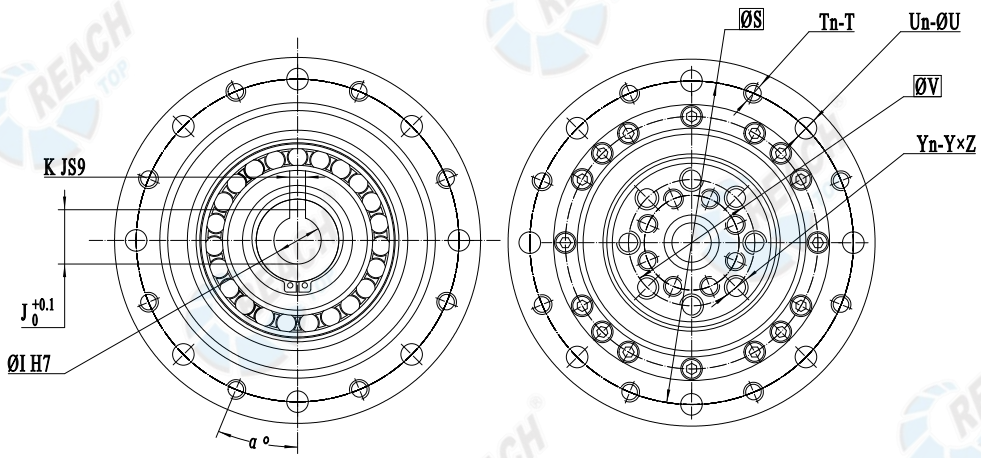

Note: L9 is the limited dimension.

RCSG Series of Harmonic Reducer

RCSG-II Dimension Table

Model / Symbol	14	17	20	25	32	40	45
ØA h7	73	79	93	107	138	160	180
ØB h7	38	48	56	67	90	110	124
ØC	14	18	21	26	26	32	32
ØD h7	56	63	72	86	113	127	148
ØE	55	62	70	85	112	126	147
ØF	31	38	45	58	78	90	107
ØG h7	11	10	14	20	26	32	32
ØI h7	6	8	8	14	14	14	19
J	-	-	9.4	16.3	16.3	16.3	21.8
K JS9	-	-	3JS9	5JS9	5JS9	5JS9	6JS9
Q	2.5	3	-	-	-	-	-
Rn	2	2	-	-	-	-	-
R	M3	M3	-	-	-	-	-
ØS	65	71	82	96	125	144	164
Tn	8	8	8	10	12	10	12
T	M4	M4	M5	M5	M6	M8	M8
Un	8	8	8	10	12	10	10
ØU	4.5	4.5	5.5	5.5	6.6	9	9
ØV	23	27	32	42	55	68	82
Yn	6	6	8	8	8	8	8
Y	M4	M5	M6	M8	M10	M10	M12
Z	12.5	12.5	12	15	18	16	18
L1	36	39	41	49	60	70.5	78
L2	34	37	38	46	57	66.5	74
L3	7	8	10	10	12	16	16
L4	3.5	4	5	5	5	5	6
L5	0.5	0.5	0.5	0.5	1	1.5	1
L6	17.7	20	21.5	21.6	23.6	29.7	30.5
L7	9.4	9.5	9	12	15	16.5	17
L8	21.4	23.5	23	29	35.2	39.5	45.5
MIN L9	2	2	2	2	2.5	2.5	3
L10±0.2	7±0.2	7.5±0.2	7.5±0.2	6±0.2	5±0.2	6±0.2	5.5±0.2
Øa	28.5	34	40	52	69	85	-
b	0.6	0.8	1	1	1.5	1.5	-
Øc	50	55	64	79	104	142	152
d	1.5	1.5	1.5	2	2	2	2
α°	22.5	22.5	22.5	18	15	18	18

RCSG-III Outline Drawing

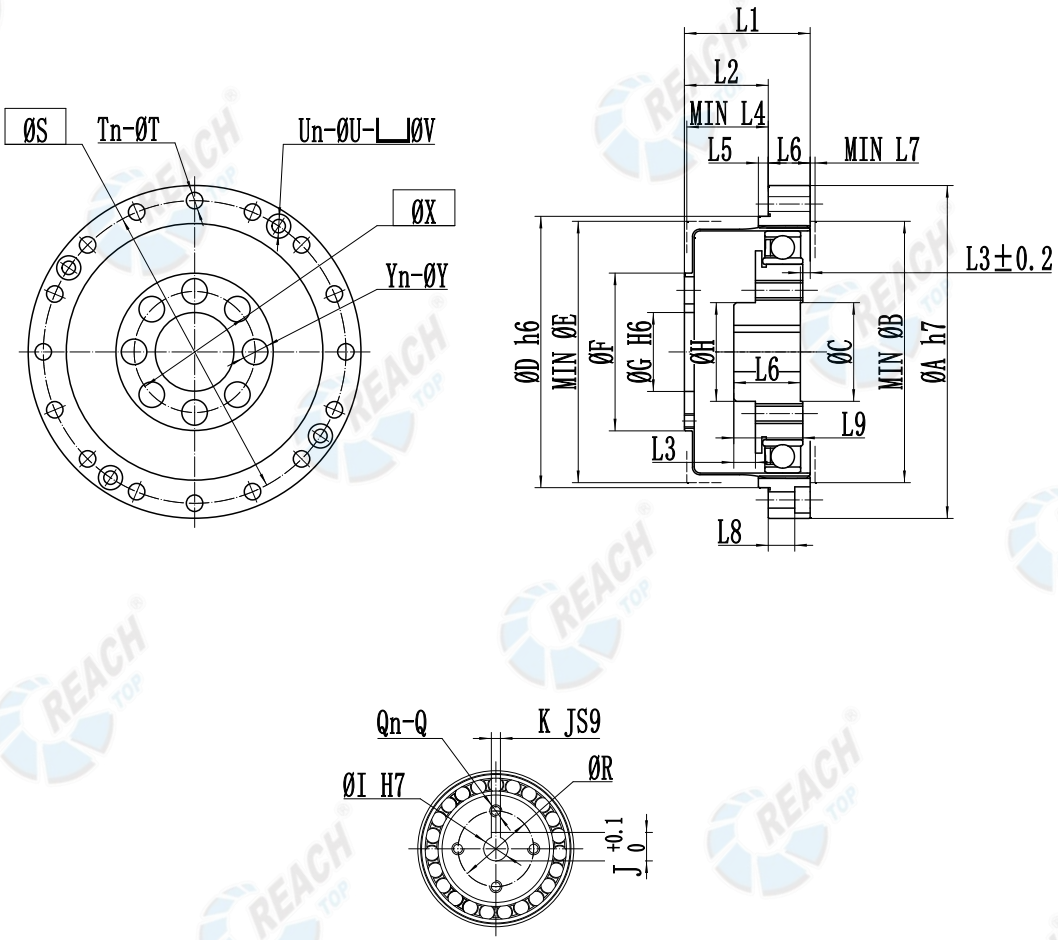

Note: ϕB, ϕE, L4, and L7 are the limited dimensions.

RCSG-III Dimension Table

Symbol \ Model	14	17	20	25	32	40	45
ØA h7	50	60	70	85	110	135	155
MIN ØB	38	45	53	66	86	106	119
ØC	22.5	27	30	40	54.5	60	75
ØD h7	38	48	54	67	90	110	124
ØE	38	45	53	66	86	106	119
ØF	23	27.2	32	40	52	64	72
ØG h7	11	10	16	20	26	32	36
ØH	14	16	20	22	30	32	38
Ø I	6	8	8	14	14	14	19
J	7	9.4	9.4	16.3	16.3	16.3	21.8
K JS9	2JS9	3JS9	3JS9	5JS9	5JS9	5JS9	6JS9
Qn	2	2	4	4	4	4	4
Q	M4	M4	M4	M5	M5	M5	M5
ØR	18	22	25	32	36	50	60
ØS	44	54	62	75	100	120	140
Tn	8	16	16	16	16	16	16
T	3.5	3.5	3.5	4.5	5.5	6.6	9
Un	4	4	4	4	4	4	4
ØU	3.5	3.5	3.5	3.5	3.5	5.5	6.6
ØV	-	-	6.5	6.5	8	9.5	12
ØX	17	19	24	30	40	50	54
Yn	6	6	8	8	8	8	8
Y	4.5	5.5	5.5	6.6	9	11	13.5
L1	23.5	26.5	29	34	42	51	57
L2	17.5±0.2	20±0.2	21.5±0.3	24±0.3	28±0.3	34±0.3	38±0.3
L3	1.8	4.7	4.7	5.5	3	4	4
MIN L4	17.1	19	20.5	23	26.8	33	36.5
L5	2	2.5	3	3	3	4	4
L6	6	6.5	7.5	10	14	17	19
MIN L7	1	1	1.5	1.5	1.5	2	2
L8	6	6.5	4	6	7	12	12
L9	10	12.5	13.5	14.5	16	20	20.4

RHSG Series of Harmonic Reducer

RHSG-I Series

RHSG-I is standard hollow hat shaped Harmonic Reducer, with compact structure. The input shaft is directly matched with the Wave Generator's inner bore by a flat key. Generally, the Circular Spline is fixed, and the Flexspline sets as output.

RHSG-II Series

RHSG-II is standard hollow hat shaped Harmonic Reducer, with compact structure. The input shaft is connected to the Wave Generator's inner hole through an Oldham coupling. Generally, the Circular Spline is fixed, and the Flexspline sets as output.

RHSG-III Series

RHSG-III is standard hollow hat shaped Harmonic Reducer, with compact structure. The Wave Generator's center is a hollow shaft, the reducer inside designed with bearing support. This model is suitable for threading. The fully sealed structure is easy to install.

RHSG-IV Series

RHSG-IV is standard hollow hat shaped Harmonic Reducer. The Wave Generator comes with an input shaft. The reducer inside designed with bearing support. This model is suitable for installation of bevel gear and synchronous pulley with output shaft. The fully sealed structure is easy to install.

RHSG Series of Harmonic Reducer

Starting torque of RHSG-I/II series /cN·m							
Ratio \ Model	14	17	20	25	32	40	45
30	6.4	9.3	15	25	54	-	-
50	4.5	6.7	8.6	17	34	62	85
80	3.1	4.4	5.4	10	21	38	54
100	2.8	3.7	4.7	8.8	20	35	47
120	-	3.4	4.2	8	17	30	43
160	-	-	4	7	15	27	36

Starting torque of RHSG-III series /cN·m							
Ratio \ Model	14	17	20	25	32	40	45
30	11	30	43	64	112	-	-
50	8.8	27	36	56	85	136	165
80	7.5	25	33	50	74	117	138
100	6.9	24	32	49	72	112	131
120	-	23	31	48	68	110	126
160	-	-	30	46	65	105	122

Starting torque of RHSG-IV series /cN·m							
Ratio \ Model	14	17	20	25	32	40	45
30	6.8	11	19	26	63	-	-
50	5.7	9.7	14	22	41	72	94
80	4.4	7.2	11	15	29	52	68
100	3.7	6.5	9.9	14	27	47	60
120	-	6	9.3	13	24	44	55
160	-	-	9	12	22	39	50

RHSG Series of Harmonic Reducer

Stiffness of RHSG series ×10⁴ N·m/rad								
Ratio \ Model		14	17	20	25	32	40	45
30	K1	0.19	0.34	0.57	1	2.4	-	-
	K2	0.24	0.44	0.71	1.3	3	-	-
	K3	0.34	0.67	1.1	2.1	4.9	-	-
50	K1	0.32	0.77	1.24	2.38	5.13	10.00	15.00
	K2	0.45	1.05	1.71	3.23	7.41	14.00	20.00
	K3	0.54	1.24	2.19	4.18	9.31	18.00	26.00
80 or more	K1	0.45	0.95	1.52	2.95	6.37	13.00	18.00
	K2	0.58	1.33	2.38	4.75	10.45	20.00	29.00
	K3	0.67	1.52	2.76	5.42	11.40	23.00	33.00

Buckling torque /N·m							
Model	14	17	20	25	32	40	45
All Ratios	180	350	590	1100	2400	4400	6300

Ratcheting torque /N·m							
Ratio \ Model	14	17	20	25	32	40	45
30	59	100	170	340	720	-	-
50	110	190	280	580	1200	2300	3500
80	140	260	450	880	1800	3600	5000
100	100	200	330	680	1300	2700	4000
120	-	150	310	610	1200	2400	3600
160	-	-	280	580	1200	2300	3300

Hysteresis loss /arc min							
Ratio \ Model	14	17	20	25	32	40	45
30	3	3	3	3	3	-	-
50	2	2	2	2	2	2	2
80 or more	1	1	1	1	1	1	1

RHSG Series of Harmonic Reducer

Model	Ratio	Rated torque at 2000r/min	Allowable peak torque at start and stop	Allowable average torque	Allowable Max.momentary torque	Max. input speed	Allowable average input speed	Backlash (arc sec)	Transmission accuracy (arc sec)	Noise (dB)
		N·m	N·m	N·m	N·m	r/min	r/min	⩽	⩽	⩽
14	30	3.8	8.6	7.8	16	8000	3500	60	120	60
	50	6.6	23	8.6	43			20	90	60
	80	9.6	29	13.5	57			20	90	60
	100	9.6	34	13.5	66			10	90	60
17	30	8.4	15.2	11.5	29	7000	3500	30	90	60
	50	19.8	42	32	86			20	90	60
	80	27.5	53	33	108			20	90	60
	100	30	66	49	134			10	90	60
	120	30	66	49	107			10	90	60
20	30	14	26	19	48	6000	3500	20	90	60
	50	32	69	42	121			20	60	60
	80	42	91	58	158			20	60	60
	100	50	102	61	182			10	60	60
	120	50	108	61	182			10	60	60
	160	50	113	61	182			10	60	60
25	30	26	48	36	90	5500	3500	20	60	60
	50	48	121	68.5	230			20	60	60
	80	78	169	107	315			20	60	60
	100	84	194	133	351			10	60	60
	120	84	207	133	376			10	60	60
	160	84	217	133	388			10	60	60
32	30	51	95	71	190	4500	3500	20	90	60
	50	94	267	133	472			20	60	60
	80	146	376	206	702			20	60	60
	100	169	411	267	800			10	60	60
	120	169	436	267	848			10	60	60
	160	169	459	267	848			10	60	60
40	50	169	497	242	847	4000	3000	20	60	60
	80	255	641	351	1210			20	60	60
	100	328	702	460	1334			10	60	60
	120	363	762	557	1458			10	60	60
	160	363	800	557	1458			10	60	60
45	50	229	650	345	1235	3800	3000	20	60	60
	80	407	918	507	1651			20	60	60
	100	459	982	650	2041			10	60	60
	120	523	1070	806	2288			10	60	60
	160	523	1147	819	2483			10	60	60

Note: The maximum backlash of RHSG-II is 10 arc sec more than that in the table.

RHSG Series of Harmonic Reducer

RHSG-I Outline Drawing

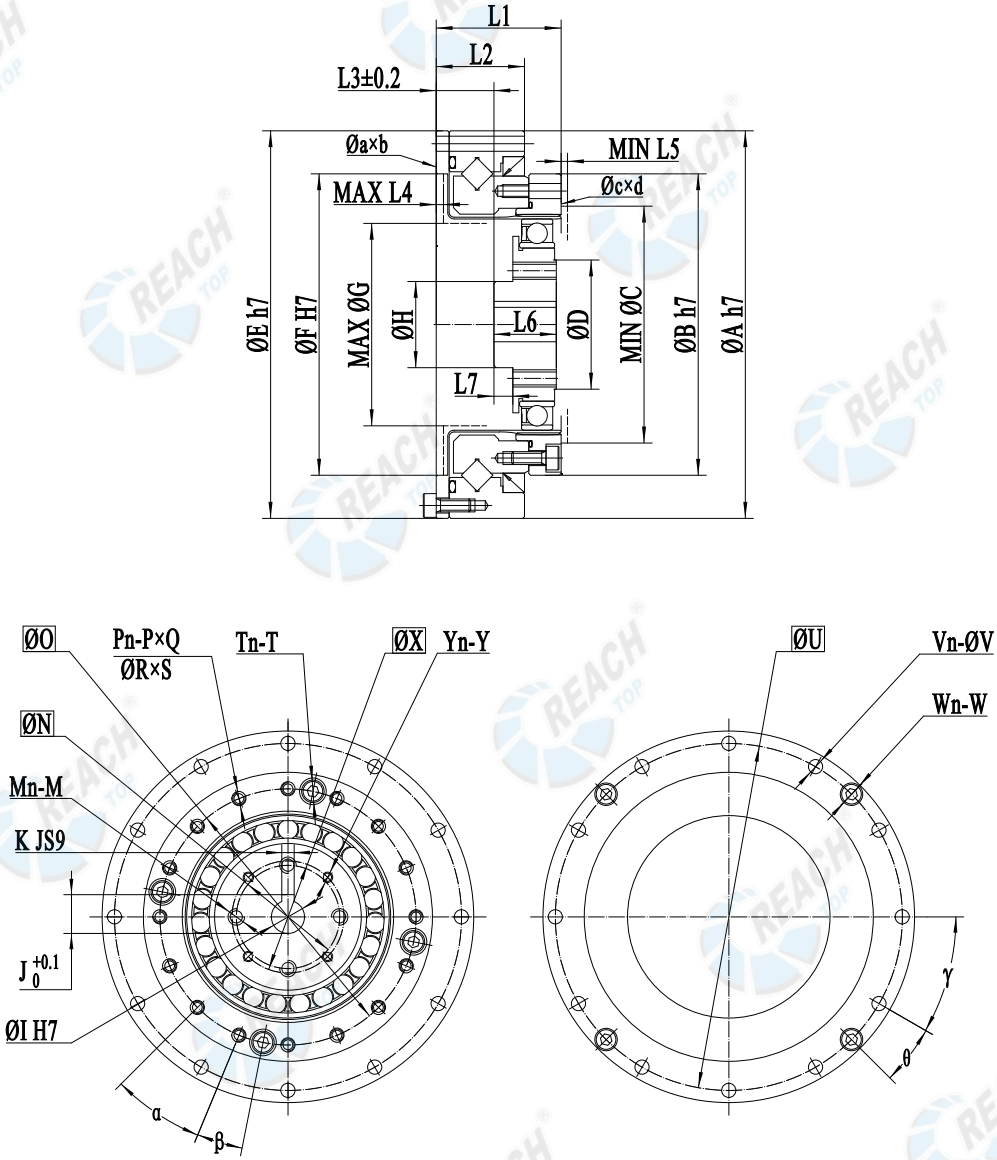

Note: ϕC, ϕG, L4, and L5 are the limited dimensions.

RHSG Series of Harmonic Reducer

RHSG-I Dimension Table

Symbol \ Model	14	17	20	25	32	40	45
ØA h7	70	80	90	110	142	170	190
ØB h7	50	60	70	85	110	135	155
MIN ØC	38	45	53	66	86	106.5	119
ØD	22.5	28	30	40	54.5	60	75
ØE h7	70	80	90	110	142	170	190
ØF H7	48	60	70	88	114	140	158
MAX ØG	31	38	45	56	73	90	101
ØH	14	16	20	22	30	32	38
ØI h7	6	8	8	14	14	14	19
J	7	9.4	9.4	16.3	16.3	16.3	21.8
K JS9	2JS9	3JS9	3JS9	5JS9	5JS9	5JS9	6JS9
Mn	2	2	4	4	4	4	4
M	M4	M4	M4	M5	M5	M5	M5
N	18	22	25	32	36	50	60
O	44	54	62	77	100	122	140
Pn	8	16	16	16	16	16	12
P	M3	M3	M3	M4	M5	M6	M8
Q	5	5.5	6	7	8	10	10
ØR	3.5	3.5	3.5	4.5	5.5	6.6	9
S	6	6.5	7.5	7	14	17	19
Tn	4	4	4	4	4	4	4
T	M3	M3	M3	M3	M4	M5	M5
ØU	64	74	84	102	132	158	180
Vn	8	12	12	12	12	12	18
ØV	3.5	3.5	3.5	4.5	5.5	6.6	6.6
Wn	4	4	4	4	4	6	6
Wn	M3	M3	M3	M3	M4	M4	M4
ØX	19	23	27	35	38	-	-
Yn	4	4	4	4	4	-	-
Y	M2	M2	M2.5	M2.5	M3	-	-
L1	23.5	26.5	29	34	42	51	56.5
L2	16.5	19	20.5	22	27	33	36.5
L3±0.2	13	13.4	13.4	16.4	22.5	27.4	34.6
MAX L4	1.7	1.7	2	2	2	2	2
MIN L5	2	2	2	2	2.5	2.5	2
L6	10	12.5	13.5	14.5	16	20	20.4
L7	1.8	3.8	4.7	5.5	3.5	4	4
Øa	52	61	69	90	116	143	-
b	1.5	1.5	1.5	2	2	2	-
Øc	36.6	45	54	67	87	107	121.5
d	0.6	1	1	1.5	1.5	1.5	2
α°	30	18	22.5	22.5	22.5	22.5	30
β°	30	18	11.5	11.5	11.5	11.5	15
γ°	45	30	30	30	30	30	20
θ°	22.5	15	15	15	15	15	10

RHSG Series of Harmonic Reducer

RHSG- II Outline Drawing

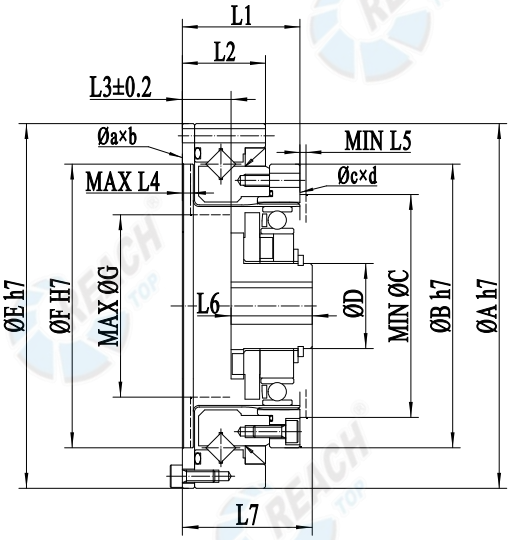

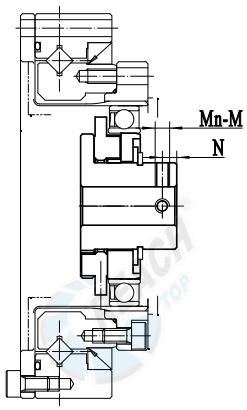

Wave Generator of model 14 and 17

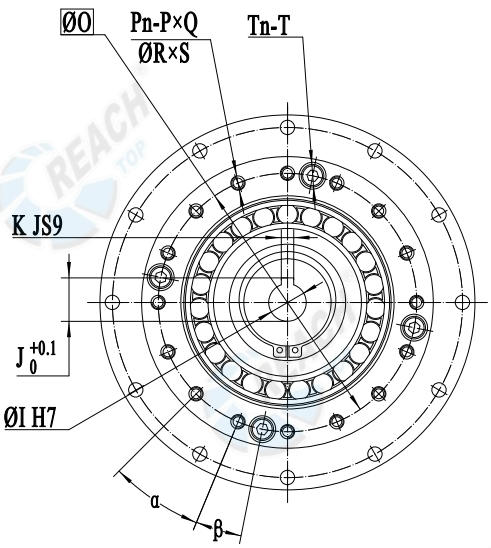

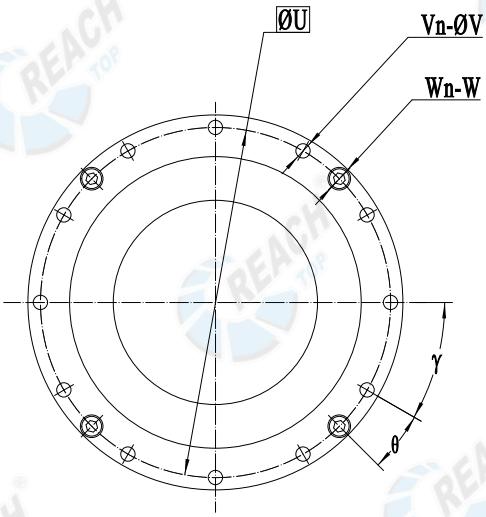

Note: ϕC, ϕG, L4, and L5 are the limited dimensions.

RHSG Series of Harmonic Reducer

RHSG-II Dimension Table

Symbol \ Model	14	17	20	25	32	40	45
ØA h7	70	80	90	110	142	170	190
ØB h7	50	60	70	85	110	135	155
MIN ØC	38	45	53	66	86	106.5	119
ØD	14	18	21	26	26	32	32
ØE h7	70	80	90	110	142	170	190
ØF H7	48	60	70	88	114	140	158
MAX ØG	31	38	45	56	73	90	101
ØI h7	6	8	8	14	14	14	19
J	-	-	9.4	16.3	16.3	16.3	21.8
K JS9	-	-	3JS9	5JS9	5JS9	5JS9	6JS9
Mn	2	2	-	-	-	-	-
M	M3	M3	-	-	-	-	-
N	2.5	3	-	-	-	-	-
O	44	54	62	77	100	122	140
Pn	8	16	16	16	16	16	12
P	M3	M3	M3	M4	M5	M6	M8
Q	5	5.5	6	7	8	10	10
ØR	3.5	3.5	3.5	4.5	5.5	6.6	9
S	6	6.5	7.5	7	14	17	19
Tn	4	4	4	4	4	4	4
T	M3	M3	M3	M3	M4	M5	M5
ØU	64	74	84	102	132	158	180
Vn	8	12	12	12	12	12	18
ØV	3.5	3.5	3.5	4.5	5.5	6.6	6.6
Wn	4	4	4	4	4	6	6
Wn	M3	M3	M3	M3	M4	M4	M4
L1	23.5	26.5	29	34	42	51	56.5
L2	16.5	19	20.5	22	27	33	36.5
L3±0.2	10.8	12.5	12	15.4	20.4	23.3	27.2
MAX L4	1.7	1.7	2	2	2	2	2
MIN L5	2	2	2	2	2.5	2.5	2
L6	17.7	20	21.5	21.6	23.6	29.7	30.5
L7	28.5	32.5	33.6	37	44	53	58
Øa	52	61	69	90	116	143	-
b	1.5	1.5	1.5	2	2	2	-
Øc	36.6	45	54	67	87	107	121.5
d	0.6	1	1	1.5	1.5	1.5	2
α°	30	18	22.5	22.5	22.5	22.5	30
β°	30	18	11.5	11.5	11.5	11.5	15
γ°	45	30	30	30	30	30	20
θ°	22.5	15	15	15	15	15	10

RHSG-III Outline Drawing

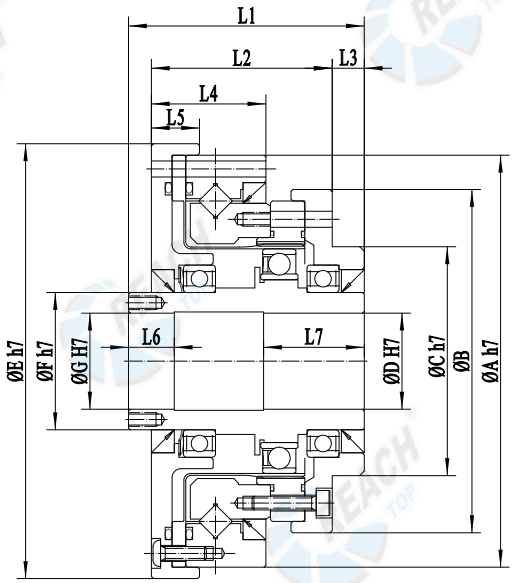

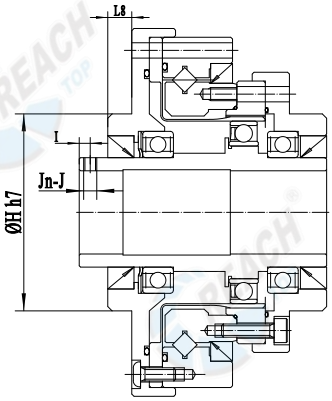

Wave Generator of model 14 and 17

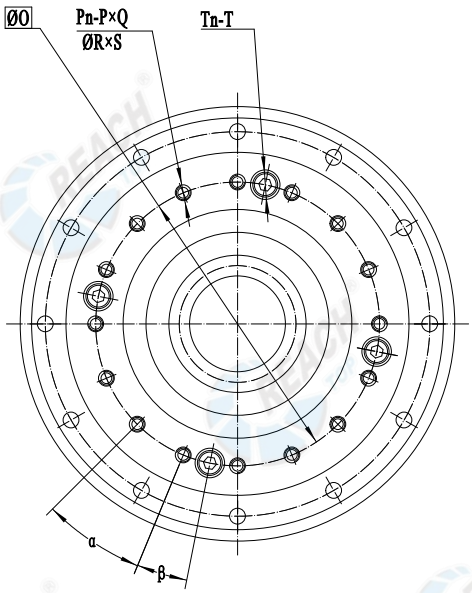

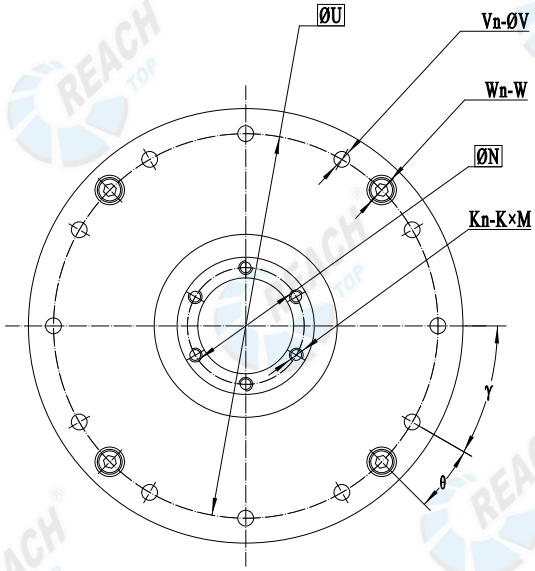

RHSG Series of Harmonic Reducer

RHSG-III Dimension Table

Model / Symbol	14	17	20	25	32	40	45
ØA h7	70	80	90	110	142	170	190
ØB	54	64	75	90	115	140	160
ØC h7	36	45	50	60	85	100	120
ØD H7	14	19	21	29	36	46	52
ØE h7	74	84	95	115	147	175	195
ØF h7	20	25	30	38	45	95	64
ØG H7	14	19	21	29	36	46	52
ØH h7	36	45	-	-	-	-	-
I	2.5	2.5	-	-	-	-	-
Jn	3	3	-	-	-	-	-
J	M3	M3	-	-	-	-	-
Kn	-	-	6	6	6	6	6
K	-	-	M3	M3	M3	M4	M4
M	-	-	6	6	6	8	8
ØN	-	-	25.5	33.5	40.5	52	58
ØO	44	54	62	77	100	122	140
Pn	8	16	16	16	16	16	12
P	M3	M3	M3	M4	M5	M6	M8
Q	5	5.5	6	7	8	10	10
ØR	3.5	3.5	3.5	4.5	5.5	6.6	9
S	11.5	12	13.5	15.5	20.5	25	28
Tn	4	4	4	4	4	4	4
T	M3	M3	M3	M3	M4	M5	M5
ØU	64	74	84	102	132	158	180
Vn	8	12	12	12	12	12	18
ØV	3.5	3.5	3.5	4.5	5.5	6.6	6.6
Wn	4	4	4	4	4	6	6
Wn	M3	M3	M3	M3	M4	M4	M4
L1	52.5	56.5	51.5	55.5	65.5	79	85
L2	33	36	39.5	43.5	53.5	64	78
L3	7.5	8.5	7	6	5	7	7
L4	20.5	23	25	26	32	38	42
L5	9	10	10.5	10.5	12	14	15
L6	10	10	10	10	10	12	15
L7	20	22	22	21.5	25	32	35
L8	5.5	5.5	-	-	-	-	-
α°	30	18	22.5	22.5	22.5	22.5	30
β°	30	18	11.5	11.5	11.5	11.5	15
γ°	45	30	30	30	30	30	20
θ°	22.5	15	15	15	15	15	10

RHSG-IV Outline Drawing

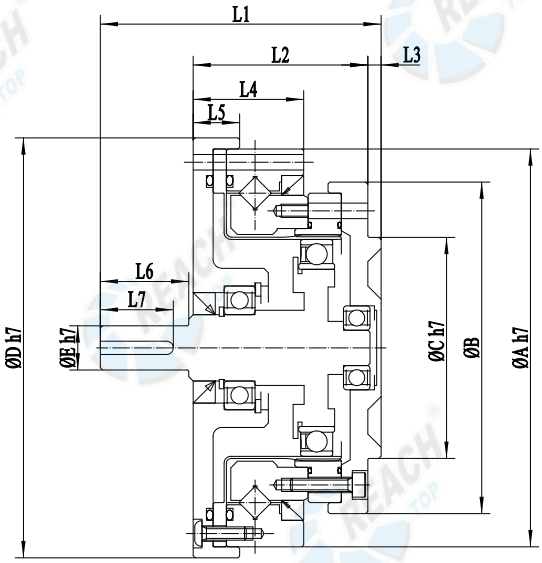

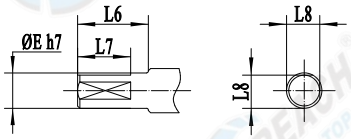

Wave Generator of model 14 and 17

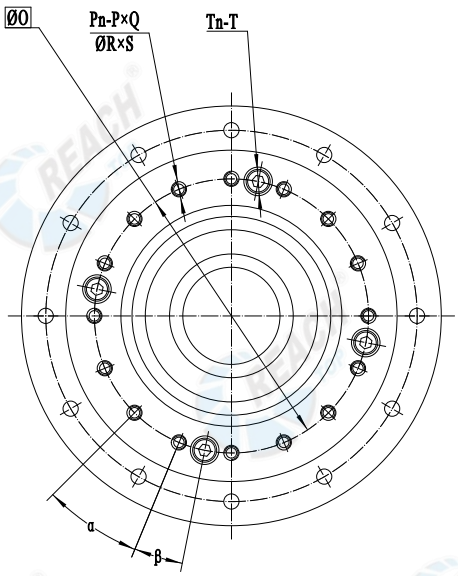

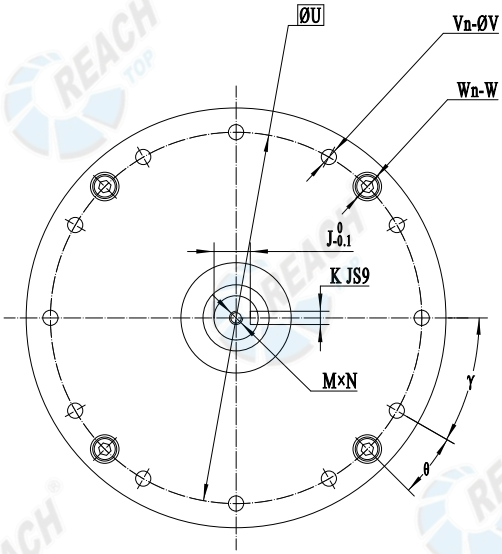

RHSG-IV Dimension Table

Symbol \ Model	14	17	20	25	32	40	45
ØA h7	70	80	90	110	142	170	190
ØB	54	64	75	90	115	140	160
ØC h7	36	45	50	60	85	100	120
ØD h7	74	84	95	115	147	175	195
ØE h7	6	8	10	14	14	16	19
J	-	-	8.2	11	11	13	15.5
K JS9	-	-	3	5	5	5	6
M	-	-	M3	M5	M5	M5	M6
N	-	-	8	12	12	12	12
ØO	44	54	62	77	100	122	140
Pn	8	16	16	16	16	16	12
P	M3	M3	M3	M4	M5	M6	M8
Q	5	5.5	6	7	8	10	10
ØR	3.5	3.5	3.5	4.5	5.5	6.6	9
S	11.5	12	13.5	15.5	20.5	25	28
Tn	4	4	4	4	4	4	4
T	M3	M3	M3	M3	M4	M5	M5
ØU	64	74	84	102	132	158	180
Vn	8	12	12	12	12	12	18
ØV	3.5	3.5	3.5	4.5	5.5	6.6	6.6
Wn	4	4	4	4	4	6	6
Wn	M3	M3	M3	M3	M4	M4	M4
L1	50.5	56	63.5	72.5	84.5	100	108
L2	33	36	39.5	43.5	53.5	64	78
L3	2.5	3	3	3	5	5	7
L4	20.5	23	25	26	32	38	42
L5	9	10	10.5	10.5	12	14	15
L6	14	16	20	25	25	30	30
L7	11	12	16.5	22.5	22.5	27.5	28
L8	5.5	7.5	-	-	-	-	-
α°	30	18	22.5	22.5	22.5	22.5	30
β°	30	18	11.5	11.5	11.5	11.5	15
γ°	45	30	30	30	30	30	20
θ°	22.5	15	15	15	15	15	10

RCSD、RCSD-ST Series of Harmonic Reducer

RCSD Series

RCSD is an ultra thin cup shaped structure design, the whole reducer adopts an ultra-flat structure, light in weight and small in size, which is suitable for limited space use in robot joints, aerospace industry, and semiconductor industry.

RCSD-ST Series

RCSD-ST is an ultra thin cup shaped structure design. The advantages in size and weight will be more obvious than RCSD, which is suitable for extra limited space.

RCSD、RCSD-ST Series of Harmonic Reducer

Starting torque of RCSD series /cN·m						
Ratio \ Model	14	17	20	25	32	40
50	5.3	7.5	9.7	17	34	58
80	3.8	5	6.2	11	23	38
100	3.2	4.2	5.5	9.6	21	33
120	-	4	4.8	8.6	18	30
160	-	-	4.1	7.4	16	27

Starting torque of RCSD-ST series /cN·m						
Ratio \ Model	14	17	20	25	32	40
50	4.5	6.8	9	16	32	56
80	3.5	4.5	5.7	10	22	36
100	3.2	3.8	5.2	9.2	20	32
120	-	3.6	4.5	8.3	17	30
160	-	-	4	7.3	15	26

Stiffness of RCSD-ST series $\times 10^4$ N·m/rad							
Ratio \ Model		14	17	20	25	32	40
50	K1	0.28	0.64	1.05	1.90	4.47	8.80
	K2	0.35	0.84	1.24	2.57	5.80	11.00
	K3	0.45	1.14	1.90	3.52	7.98	15.00
80 or more	K1	0.38	0.80	1.24	2.57	5.80	11.00
	K2	0.42	0.89	1.62	3.52	7.41	14.00
	K3	0.58	1.24	2.38	4.47	10.45	20.00

RCSD、RCSD-ST Series of Harmonic Reducer

Buckling torque /N·m						
Model	14	17	20	25	32	40
All Ratios	190	330	560	1000	2200	4300

Ratcheting torque /N·m						
Model / Ratio	14	17	20	25	32	40
50	88	150	220	450	980	1800
80	110	200	350	680	1400	2100
100	84	160	260	500	1000	2100
120	-	120	240	470	980	2100
160	-	-	220	450	980	1800

Hysteresis loss /arc min						
Model / Ratio	14	17	20	25	32	40
50	2.5	1.5	1.5	1.5	1.5	1.5
80 or more	2	1	1	1	1	1

RCSD、RCSD-ST Series of Harmonic Reducer

Model	Ratio	Rated torque at 2000r/min	Allowable peak torque at start and stop	Allowable average torque	Allowable Max.momentary torque	Max. input speed	Allowable average input speed	Backlash (arc sec)	Transmission accuracy (arc sec)	Noise (dB)
		N·m	N·m	N·m	N·m	r/min	r/min	⩽	⩽	⩽
14	50	3.5	11.4	4.6	23	8000	3500	20	90	60
	80	5.1	15	6.2	29			20	90	60
	100	5.1	18	7.3	33			20	90	60
17	50	10.4	22	17	46	7000	3500	20	90	60
	80	14	29	21	54			20	90	60
	100	15	35	26	67			20	90	60
	120	15	35	26	67			20	90	60
20	50	16	37	23	66	6000	3500	20	60	60
	80	23	49	28	78			20	60	60
	100	27	54	32	90			20	60	60
	120	27	57	32	90			20	60	60
	160	27	61	32	90			20	60	60
25	50	26	66	36	121	5500	3500	20	60	60
	80	42	91	62	157			20	60	60
	100	45	104	71	175			20	60	60
	120	45	111	71	187			20	60	60
	160	45	118	71	195			20	60	60
32	50	50	143	71	255	4500	3500	20	60	60
	80	79	202	126	350			20	60	60
	100	91	221	144	399			20	60	60
	120	91	235	144	423			20	60	60
	160	91	240	144	435			20	60	60
40	50	91	267	130	456	4000	3000	20	60	60
	100	176	387	247	665			20	60	60
	160	196	430	300	727			20	60	60

RCSD Series of Harmonic Reducer

RCSD-I Outline Drawing

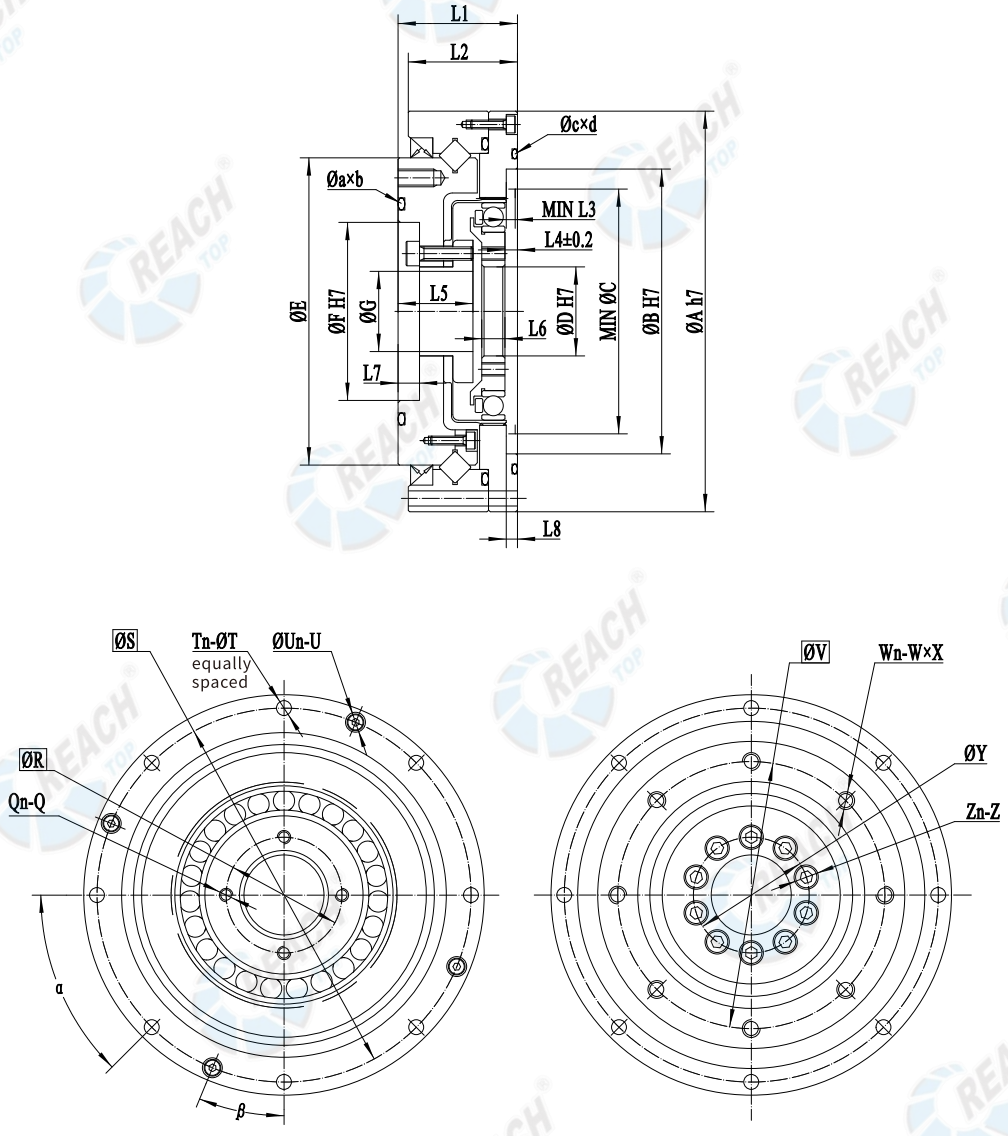

Note: ϕC and L3 are the limited dimensions.

RCSD Series of Harmonic Reducer

RCSD-I Dimension Table

Symbol \ Model	14	17	20	25	32	40
ØA h7	70	80	90	110	142	170
ØB h7	48	56	64	80	106	132
MIN ØC	38	46	55	67	86	105.5
ØD H7	11	15	20	24	32	40
ØE	49	59	69	84	110	132
ØF H7	30	34	40	52	70	80
ØG	9	9	18	22	29	27
Qn	4	4	4	4	4	4
Q	M3	M3	M3	M3	M4	M5
ØR	17	21	26	30	40	50
ØS	64	74	84	102	132	158
Tn	6	8	8	10	10	10
ØT	3.5	3.5	3.5	4.5	5.5	6.6
Un	4	4	4	5	5	5
U	M2	M2	M2	M3	M4	M4
ØV	42	50	60	73	96	116
Wn	8	12	8	8	8	12
W	M3	M3	M4	M5	M6	M6
X	5	6	8	8	10	10
ØY	17	19.5	26	32	42	52
Zn	6	8	12	12	12	12
Z	M3	M4	M3	M4	M5	M6
L1	22	22.7	26.8	31.5	37	45
L2	21.5	22.2	24.5	29.4	34.2	38.5
MIN L3	2	2	2	2	2	2.5
L4±0.1	2.8	2.8	2.8	3.4	3.5	3.6
L5	12.9	13.4	16.8	19.5	22	27
L6	4	5	5.2	6.3	8.6	10.3
L7	4.9	5.4	4.8	5.5	6	4
L8	2.5	2.5	2.5	3	3	3
Øa	34	38	46	59	79	98
b	0.8	1.5	2	1.5	2	2
Øc	50	59	69	85	111.2	138
d	1.5	1.5	1.5	1.2	1.9	2
α°	30	45	45	36	36	36
β°	30	22.5	22.5	18	18	18

RCSD-I-ST Outline Drawing

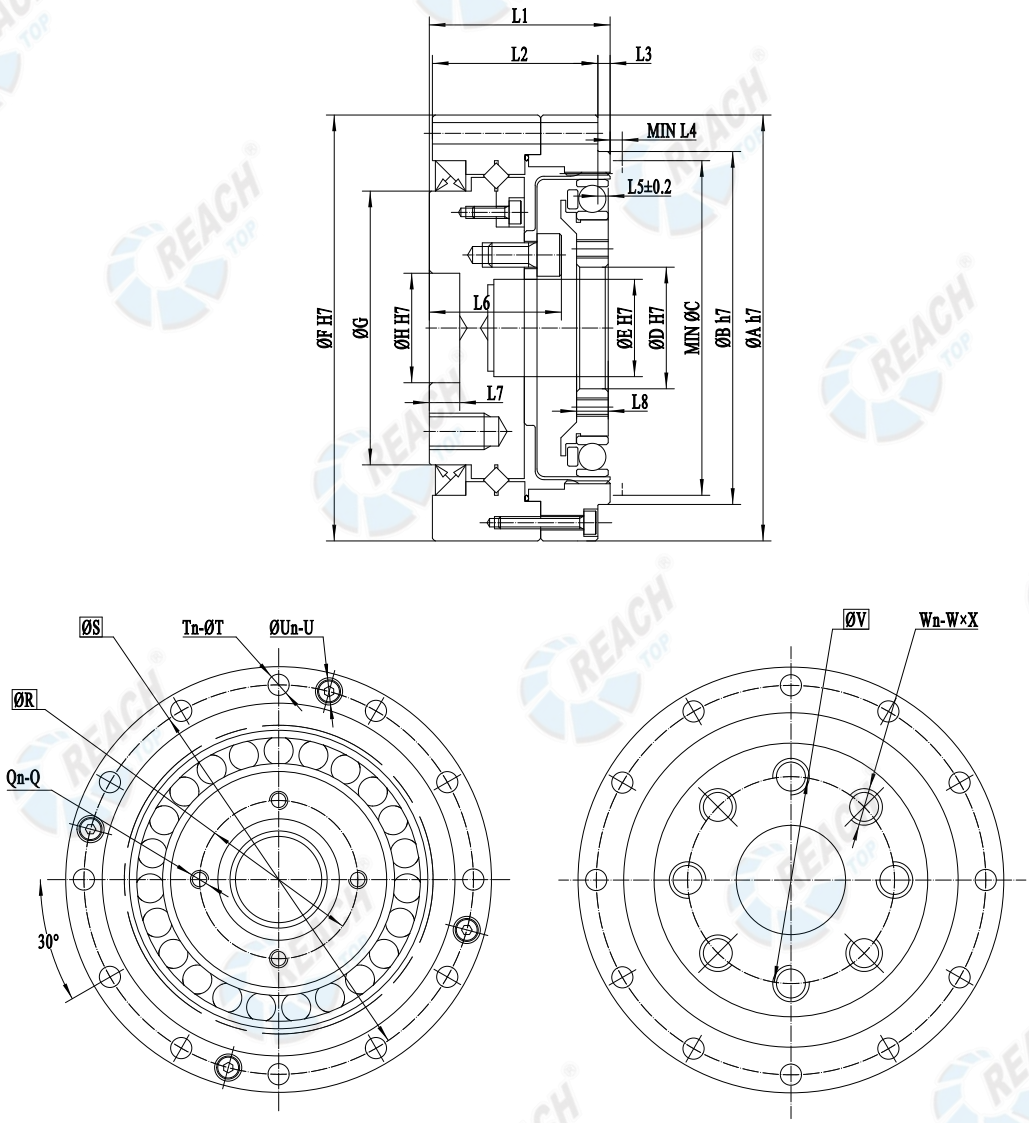

Note: ϕC and L4 are the limited dimensions.

RCSD-I-ST Series of Harmonic Reducer

RCSD-I-ST Dimension Table

Symbol \ Model	14	17	20	25	32	40
ØA h7	55	62	70	85	112	126
ØB h7	42.5	49.5	58	73	96	108.5
MIN ØC	38	46	55	67	86	106
ØD H7	11	15	20	24	32	40
ØE H7	11	11	166	20	30	32
ØF H7	55	62	70	85	112	126
ØG	31	38	45	58	78	90
ØH H7	12	14	18	24	32	36
Qn	4	4	4	4	4	4
Q	M3	M3	M3	M3	M4	M5
ØR	17	21	26	30	40	50
ØS	49	56	64	79	104	117.5
Tn	6	10	12	18	15	20
ØT	3.5	3.5	3.5	3.5	4.5	5.5
Un	3	5	4	6	6	6
U	M2	M2	M2	M2	M2	M3
ØV	25	27	34	42	57	72
Wn	10	8	8	8	10	10
W	M3	M5	M6	M8	M8	M10
X	7	8	9	12	12	15
L1	25	26.5	29.7	37.1	43	51.7
L2	22.5	24	27.2	33.6	39	46.7
L3	2	2	2	3	3	4
MIN L4	2.8	2	2	2	2	2.5
L5±0.1	1.7	1.7	1.7	2.6	2.5	3.4
L6	18.4	19.7	21.7	27.1	29.5	35.7
L7	5	5	5	5.5	5.5	6
L8	4	5	5.2	6.3	8.6	10.3
α°	30	36	30	20	20	20
β°	30	18	15	10	10	10

RHSD Series of Harmonic Reducer

RHSD-I Series

RHSD-I is an ultra thin hollow structure, small in size and light in weight, which is suitable for the use in the tight-space occasions.

RHSD-III Series

RHSD-III is an ultra thin hollow structure. The Wave Generator's center is a shaft hole, which is suitable for the use in tight-space requirement and threading occasions.

RHSD Series of Harmonic Reducer

Starting torque of RHSD- I series /cN·m						
Ratio \ Model	14	17	20	25	32	40
50	6.5	20	27	40	64	97
80	5.5	17	25	38	58	85
100	5	17	24	36	54	80
120	-	15	23	34	50	78
160	-	-	22	33	48	75

Starting torque of RHSD-III series /cN·m						
Ratio \ Model	14	17	20	25	32	40
50	4.5	40	55	80	115	180
80	3.5	35	50	75	110	175
100	3.2	37	50	75	105	160
120	-	35	50	75	100	158
160	-	-	50	74	97	154

Stiffness of RHSD series $\times 10^4$ N·m/rad							
Ratio \ Model		14	17	20	25	32	40
50	K1	0.28	0.64	1.05	1.90	4.47	8.80
	K2	0.35	0.84	1.24	2.57	5.80	11.00
	K3	0.45	1.14	1.90	3.52	7.98	15.00
80 or more	K1	0.38	0.80	1.24	2.57	5.80	11.00
	K2	0.42	0.89	1.62	3.52	7.41	14.00
	K3	0.58	1.24	2.38	4.47	10.45	20.00

RHSD Series of Harmonic Reducer

Buckling torque /N·m						
Model	14	17	20	25	32	40
All Ratios	130	260	470	850	1800	3600

Ratcheting torque /N·m						
Model / Ratio	14	17	20	25	32	40
50	88	150	220	450	980	1800
80	110	200	350	680	1400	2100
100	84	160	260	500	1000	2100
120	-	120	240	470	980	2100
160	-	-	220	450	980	1800

Hysteresis loss /arc min						
Model / Ratio	14	17	20	25	32	40
50	2.5	1.5	1.5	1.5	1.5	2
80 or more	2	1	1	1	1	1

RHSD Series of Harmonic Reducer

Model	Ratio	Rated torque at 2000r/min	Allowable peak torque at start and stop	Allowable average torque	Allowable Max.momentary torque	Max. input speed	Allowable average input speed	Backlash (arc sec)	Transmission accuracy (arc sec)	Noise (dB)
		N·m	N·m	N·m	N·m	r/min	r/min	⩽	⩽	⩽
14	50	3.5	11.4	4.6	23	8000	3500	20	90	60
	80	5.1	15	6.2	29			20	90	60
	100	5.1	18	7.3	33			20	90	60
17	50	10.4	22	17	46	7000	3500	20	90	60
	80	14	29	21	54			20	90	60
	100	15.2	35	26	67			20	90	60
	120	15.2	35	26	67			20	90	60
20	50	16.1	37	23	66	6000	3500	20	60	60
	80	23	49	28	78			20	60	60
	100	27	54	32	90			20	60	60
	120	27	57	32	90			20	60	60
	160	27	60	32	90			20	60	60
25	50	26	66	36	121	5500	3500	20	60	60
	80	42	91	62	157			20	60	60
	100	45	105	71	175			20	60	60
	120	45	111	71	187			20	60	60
	160	45	118	71	190			20	60	60
32	50	50	143	71	255	4500	3500	20	60	60
	80	79	202	126	350			20	60	60
	100	91	221	144	399			20	60	60
	120	91	235	144	423			20	60	60
	160	91	250	144	423			20	60	60
40	50	91	267	130	456	4000	3000	10	60	60
	100	176	387	247	665			10	60	60
	160	196	430	300	727			10	60	60

RHSD Series of Harmonic Reducer

RHSD-I Outline Drawing

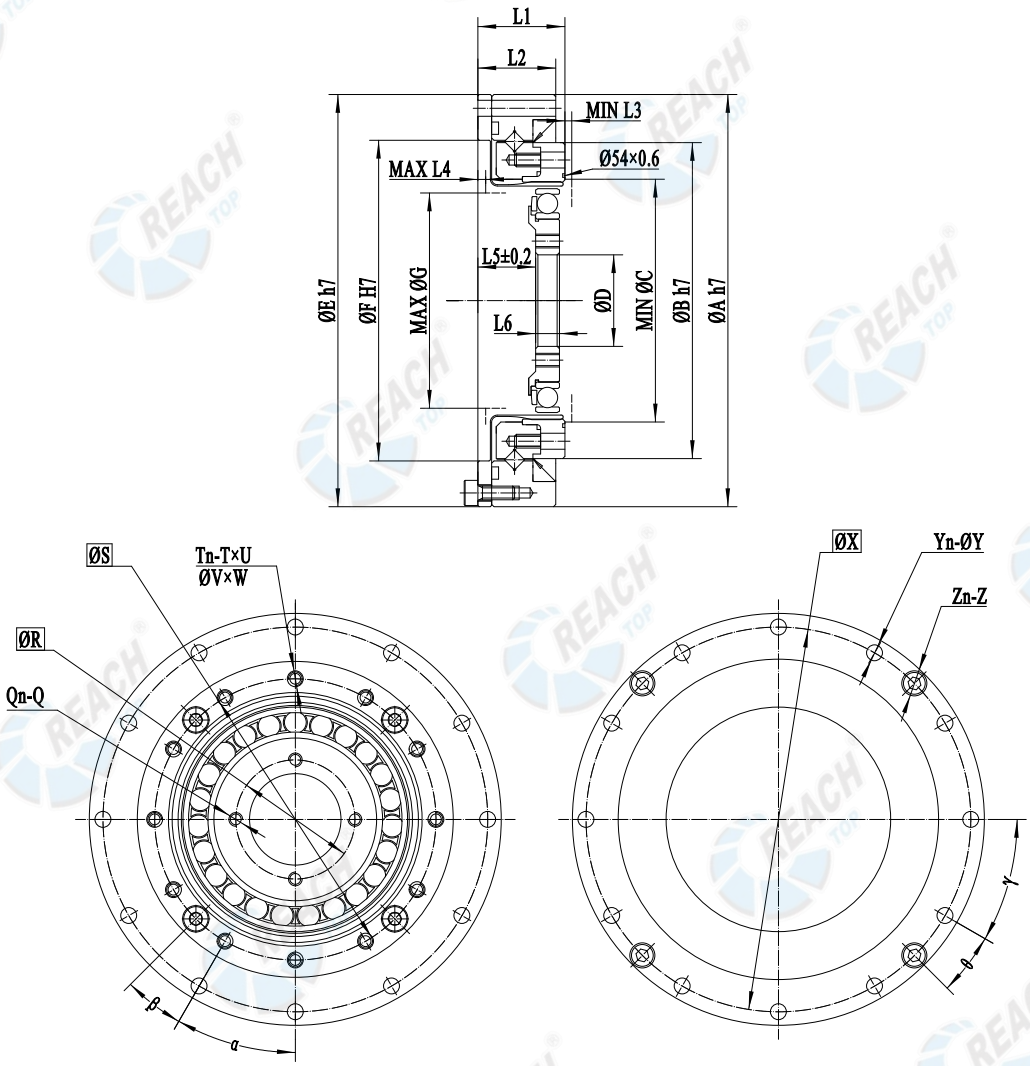

Note: ϕC, ϕG, L3 and L4 are the limited dimensions.

RHSD Series of Harmonic Reducer

RHSD-I Dimension Table

Symbol \ Model	14	17	20	25	32	40
ØA h7	70	80	90	110	142	170
ØB h7	49	59	69	84	110	132
MIN ØC	36.5	45	53	66	86	106
ØD	11	15	20	24	32	40
ØE h7	70	80	90	110	142	170
ØF H7	50	61	70	88	114	140
MAX ØG	31	39	47	58	76	90
Qn	4	4	4	4	4	4
Q	M3	M3	M3	M3	M4	M5
ØR	17	21	26	30	40	50
ØS	43	52	61.4	76	99	120
Tn	8	12	12	12	12	12
T	M3	M3	M3	M4	M5	M5
U	4.5	6	5	6	5.5	5.5
ØV	3.5	3.5	3.5	4.5	5.5	5.5
W	5	5.5	5.5	6	10	11
ØX	64	74	84	102	132	158
Yn	8	12	12	12	12	12
ØY	3.5	3.5	3.5	4.5	5.5	6.6
Zn	4	4	4	4	4	4
Z	M3	M3	M3	M3	M4	M5
L1	17.5	18.5	16	22	27.9	33
L2	15.5	16.5	17	20	23.6	28
MIN L3	1.5	1.5	1.5	2	2.5	2.5
MAX L4	1.2	1.7	1.7	1.9	2.1	2.2
L5±0.1	11.5	13.4	12.6	15.3	19	21.1
L6	4	5	5.2	6.3	8.6	11.1
Øa	36.6	45	54	66	87	106
b	0.6	0.8	0.6	1	1.5	1.5
α°	45	30	30	30	30	30
β°	15	15	15	15	15	15
γ°	45	30	30	30	30	30
θ°	22.5	12	15	15	15	15

RHSD-III Outline Drawing

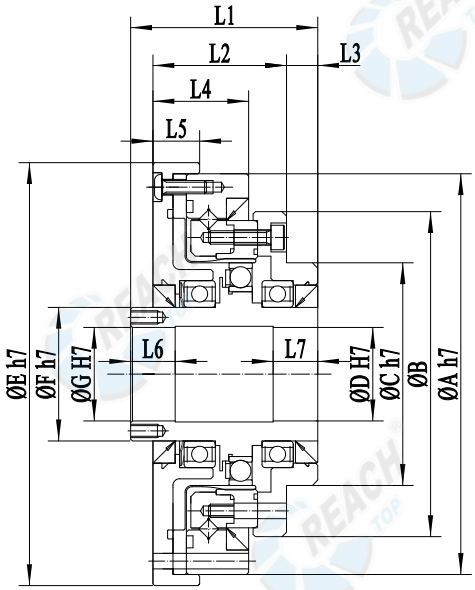

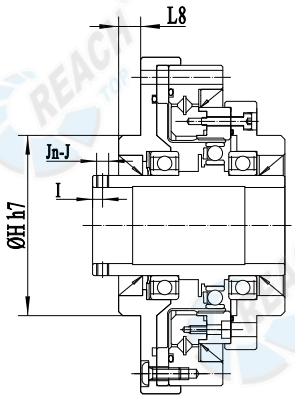

Wave Generator of model 14 and 17

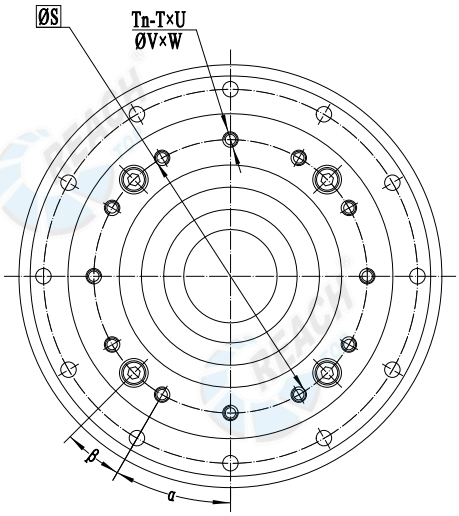

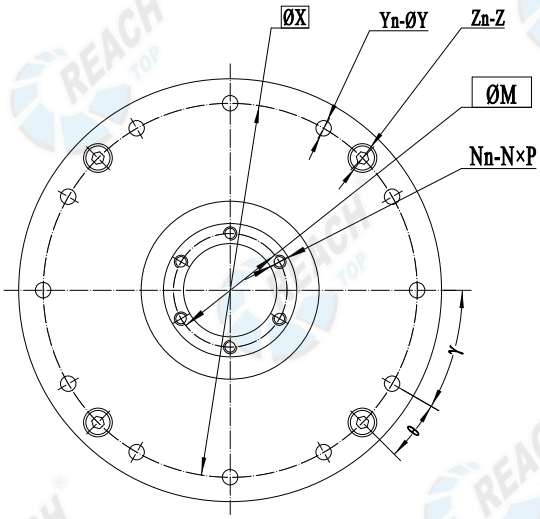

RHSD Series of Harmonic Reducer

RHSD-III Dimension Table

Symbol \ Model	14	17	20	25	32	40
ØA h7	70	80	90	110	142	170
ØB	54	62	73	87	115	137
ØC h7	36	45	50	60	85	100
ØD H7	14	19	21	29	36	51
ØE h7	74	84	95	115	147	175
ØF h7	20	25	30	38	45	65
ØG H7	14	19	21	29	36	51
ØH h7	36	45	-	-	-	-
I	2.5	2.5	-	-	-	-
Jn	3	3	-	-	-	-
J	M3	M3	-	-	-	-
ØM	-	-	25.5	33.5	40.5	57
Nn	-	-	6	6	6	6
N	-	-	M3	M3	M3	M4
P	-	-	6	6	6	8
ØS	43	52	61.4	76	99	120
Tn	8	12	12	12	12	12
T	M3	M3	M3	M4	M5	M6
U	5	5.5	6	6	5.5	6.6
ØV	3.5	3.5	3.5	4.5	5.5	5.5
W	5.5	5.5	11.5	13.5	20.4	21
ØX	64	74	84	102	132	158
Yn	8	12	12	12	12	12
ØY	3.5	3.5	3.5	4.5	5.5	6.6
Zn	4	4	4	4	4	6
Z	M3	M3	M3	M3	M4	M5
L1	44	48	42	46.5	55	65
L2	27	29	30	33.5	42.5	48
L3	6	7	7	7	5.5	9
L4	19.5	20.5	21.5	24	28.6	33
L5	9	10	10.5	10.5	12	14
L6	10	10	10	10	11	12
L7	10	10	10	10	14.5	16
L8	5.5	5.5	-	-	-	-
α°	45	30	30	30	30	30
β°	15	15	15	15	15	15
γ°	45	30	30	30	30	30
θ°	22.5	12	15	15	15	15

RCS-mini Series of Harmonic Reducer

Rating Table

Model	Ratio	Rated torque at 2000r/min	Allowable peak torque at start and stop	Allowable average torque	Allowable Max.momentary torque	Max. input speed	Allowable average input speed	Backlash (arc sec)	Transmission accuracy (arc sec)	Noise (dB)
		N·m	N·m	N·m	N·m	r/min	r/min	⩽	⩽	⩽
5	30	0.25	0.5	0.38	0.9	8500	4000	70	240	60
	50	0.4	0.9	0.53	1.8			50	180	60
	100	0.6	1.4	0.94	2.7			35	180	60
8	30	0.9	1.8	1.4	3.3	8000	3500	60	120	60
	50	1.8	3.3	2.3	6.6			35	120	60
	100	2.4	4.8	3.3	9			20	120	60
11	30	2.2	4.5	3.4	8.5	8000	3500	60	120	60
	50	3.5	8.3	5.5	17			24	120	60
	100	5	11	8.9	25			20	120	60

Note: The maximum backlash of RHS-mini-II is 10 arc sec more than that in the table.

Starting torque /cN·m

Ratio \ Model	5	8	11
30	0.53	1.5	2.9
50	0.4	1	1.8
100	0.3	0.8	1.2

Ratcheting torque /N·m

Ratio \ Model	5	8	11
30	2.7	11	29
50	3.2	12	34
100	3.5	14	43

Buckling torque /N·m

Model	5	8	11
All Ratios	9.8	35	90

Hysteresis loss /arc min

Ratio \ Model	5	8	11
30	3	3	3
50	3	3	2
80 or more	3	2	2

Stiffness of RCS-mini series $\times 10^4$ N·m/rad

Ratio \ Model		5	8	11
30	K1	0.009	0.034	0.084
	K2	0.011	0.044	0.13
	K3	0.012	0.054	0.16
50	K1	0.011	0.04	0.22
	K2	0.014	0.07	0.30
	K3	0.014	0.08	0.32
80 or more	K1	0.015	0.09	0.27
	K2	0.018	0.10	0.34
	K3	0.02	0.12	0.44

RCS-mini-III Outline Drawing

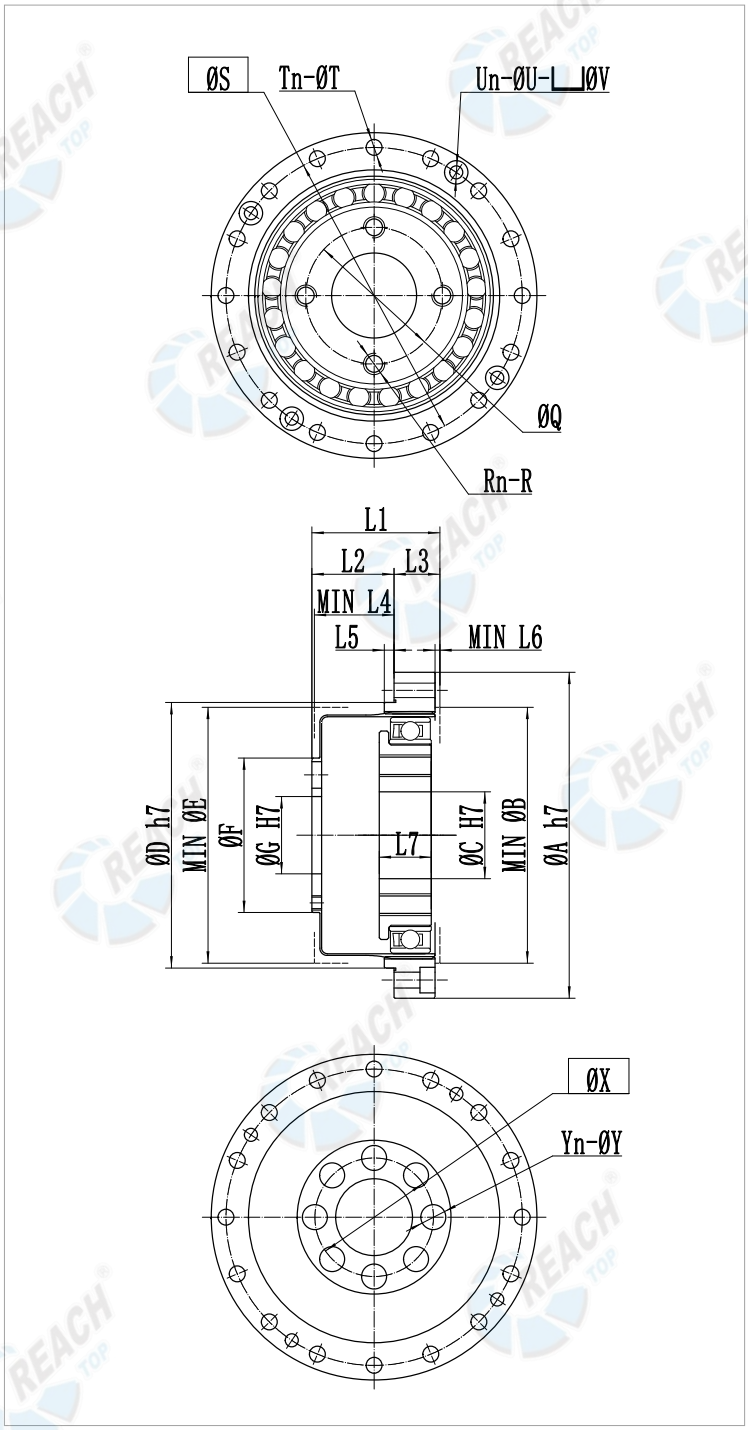

RCS-mini-III Dimension Table

Model / Symbol	8	11
ØA h7	30	40
MIN ØB	21.5	29.5
ØC	7	10
ØD h7	-	31
ØE	21.5	30
ØF	12.3	17.8
ØG h7	4	6
ØQ	10	16
Rn	4	4
R	M2	M2.5
ØS	25.5	35
Tn	8	8
T	2.4	3
Un	4	4
ØU	2.4	3
ØX	8	12
Yn	6	6
Y	3	3.5
L1	17	19
L2	12.4±0.1	14.7±0.1
L3	4.5	4.5
MIN L4	11.34	14
L5	-	2
L6	0.8	0.8
MIN L7	4.5	6

RHS-mini Series of Harmonic Reducer

Rating Table

Model	Ratio	Rated torque at 2000r/min	Allowable peak torque at start and stop	Allowable average torque	Allowable Max.momentary torque	Max. input speed	Allowable average input speed	Backlash (arc sec)	Transmission accuracy (arc sec)	Noise (dB)
		N·m	N·m	N·m	N·m	r/min	r/min	⩽	⩽	⩽
5	30	0.25	0.5	0.38	0.9	8500	4000	70	240	60
	50	0.4	0.9	0.53	1.8			50	180	60
	100	0.6	1.4	0.94	2.7			35	180	60
8	30	0.9	1.8	1.4	3.3	8000	3500	60	120	60
	50	1.8	3.3	2.3	6.6			35	120	60
	100	2.4	4.8	3.3	9			20	120	60
11	30	2.2	4.5	3.4	8.5	8000	3500	60	120	60
	50	3.5	8.3	5.5	17			24	120	60
	100	5	11	8.9	25			20	120	60

Note: The maximum backlash of RHS-mini-II is 10 arc sec more than that in the table.

Starting torque /cN·m

Ratio \ Model	5	8	11
30	0.53	1.3	2.7
50	0.4	0.8	1.6
100	0.3	0.6	1.1

Ratcheting torque /N·m

Ratio \ Model	5	8	11
30	2.7	11	29
50	3.2	12	34
100	3.5	14	43

Buckling torque /N·m

Model	5	8	11
All Ratios	7	24.5	63

Hysteresis loss /arc min

Ratio \ Model	5	8	11
30	3	3	3
50	3	3	2
80 or more	3	2	2

Stiffness of RHS-mini series $\times 10^4$ N·m/rad

Ratio \ Model		5	8	11
30	K1	0.009	0.034	0.084
	K2	0.011	0.044	0.13
	K3	0.012	0.054	0.16
50	K1	0.011	0.04	0.22
	K2	0.014	0.07	0.30
	K3	0.014	0.08	0.32
80 or more	K1	0.015	0.09	0.27
	K2	0.018	0.10	0.34
	K3	0.02	0.12	0.44

RHS-mini Series of Harmonic Reducer

RHS-mini-I Outline Drawing

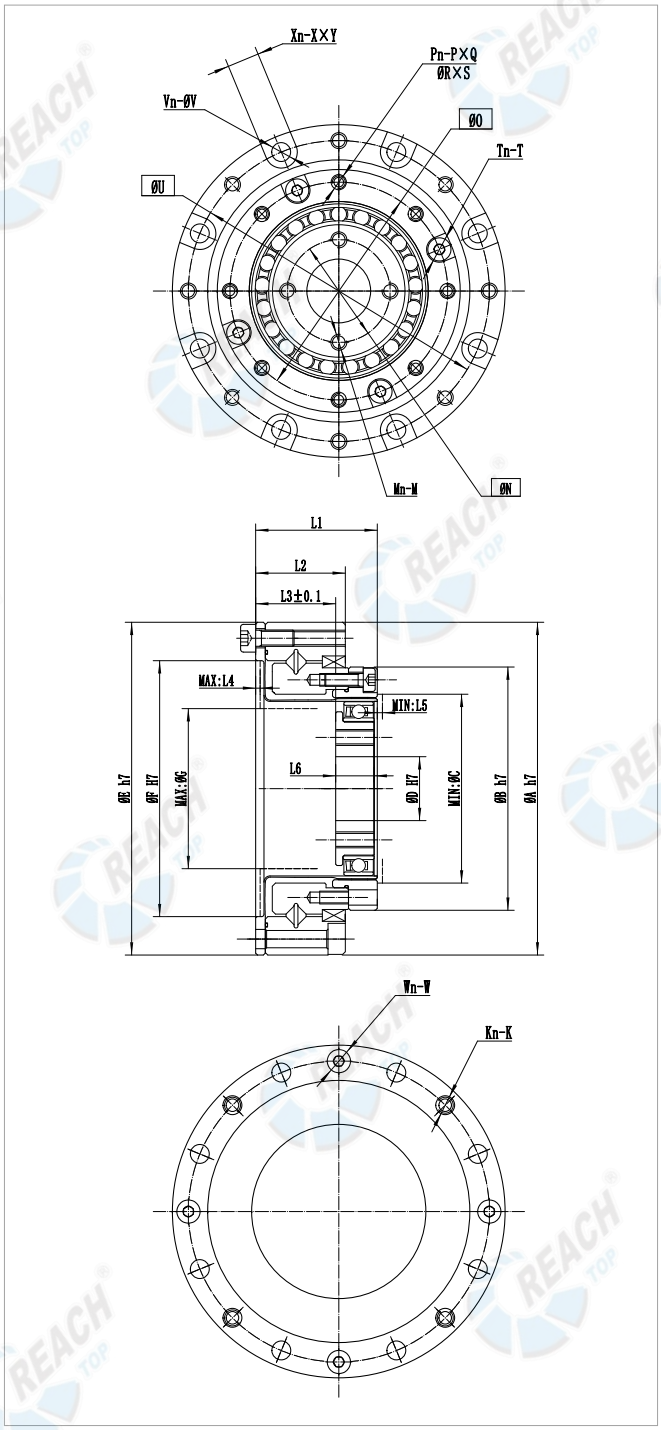

RHS-mini-I Dimension Table

Symbol \ Model	5	8	11
ØA h7	32	40	52
ØB h7	22.5	30	38
MIN:ØC	15.5	21.5	29.5
ØD H7	4	7	10
ØE h7	32	40	52
ØF H7	24	30	40
MAX:ØG	11.1	18	25
Mn	4	4	4
M	M1.6	M2	M2.5
ØN	7	10	16
Kn	4	4	4
K	1.6	M2	M2.5
ØO	18.5	26	34
Pn	6	8	8
P	1.6	M2	M2
Q	4	4	4
ØR	1.8	2.4	2.4
S	3.2	4.5	4.5
Tn	3	4	4
T	M1.6	M2	M2
ØU	28.5	36	47
Vn	6	8	8
ØV	1.8	2.3	3
Xn	6	8	8
X	3.2	4	5
Y	2	2.5	2.7
Wn	3	4	4
W	M1.6	M2	M2.5
L1	12	17	19
L2	10	13	14
L3±0.1	9.1	12	12.5
MAX:L4	0.7	0.7	0.7
MIN:L5	0.6	0.8	0.8
L6	2.5	4.5	6

RHS-mini Series of Harmonic Reducer

RHS-mini-III Outline Drawing

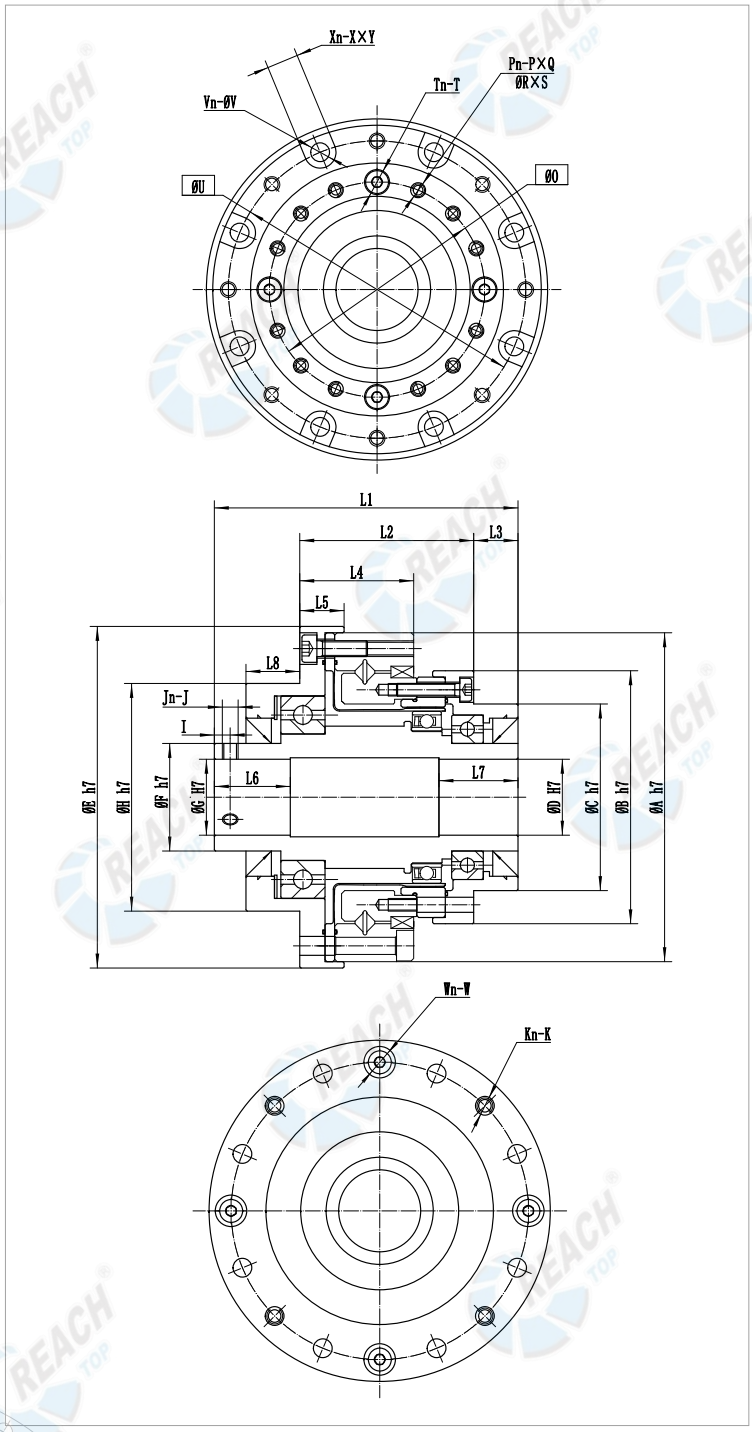

RHS-mini-III Dimension Table

Symbol \ Model	8	11
ØA h7	40	52
ØB	32	40
ØC h7	21	29.5
ØD H7	8	12
ØE h7	42	54
ØF h7	12	17
ØG H7	8	12
ØH h7	28	36
I	2.5	2.5
Jn	3	3
J	M2.5	M2.5
Kn	4	4
K	M2	M2.5
ØO	26	34
Pn	12	12
P	M2	M2
Q	4	4
ØR	2.4	2.4
S	6.5	9
Tn	4	4
T	M2	M2
ØU	36	47
Vn	8	8
ØV	2.3	3
Xn	8	8
X	4	5
Y	2.5	2.7
Wn	4	4
W	M2	M2.5
L1	42.5	48
L2	23	27.5
L3	7	7
L4	16	18
L5	6	7
L6	12	12
L7	10	12.5
L8	7.5	8.5

RCSD-mini Series of Harmonic Reducer

Rating Table

Model	Ratio	Rated torque at 2000r/min	Allowable peak torque at start and stop	Allowable average torque	Allowable Max.momentary torque	Max. input speed	Allowable average input speed	Backlash (arc sec)	Transmission accuracy (arc sec)	Noise (dB)
		N·m	N·m	N·m	N·m	r/min	r/min	⩽	⩽	⩽
5	50	0.25	0.6	0.37	1.25	8500	4000	50	180	60
	100	0.4	1	0.66	1.9			35	180	60
8	50	1.25	2.3	1.6	4.6	8000	3500	35	120	60
	100	1.65	3.3	2.3	6.3			20	120	60
11	50	2.4	5.8	3.5	11.5	8000	3500	24	120	60
	100	3.5	7.7	6.2	17.5			20	120	60

Starting torque /cN·m

Ratio \ Model	5	8	11
50	0.45	0.85	1.8
100	0.35	0.66	1.2

Ratcheting torque /N·m

Ratio \ Model	5	8	11
50	2.5	9.5	27
100	2.8	11	34

Buckling torque /N·m

Model	5	8	11
All Ratios	6	22.5	58.5

Hysteresis loss /arc min

Ratio \ Model	5	8	11
50	4	3.5	3
80 or more	4	2.5	2.5

Stiffness of RCSD-mini series $\times 10^4$ N·m/rad

Ratio \ Model		5	8	11
50	K1	0.009	0.037	0.19
	K2	0.01	0.051	0.23
	K3	0.012	0.071	0.27
80 or more	K1	0.012	0.073	0.23
	K2	0.014	0.077	0.26
	K3	0.017	0.1	0.37

RHSD-mini Series of Harmonic Reducer

Rating Table

Model	Ratio	Rated torque at 2000r/min	Allowable peak torque at start and stop	Allowable average torque	Allowable Max.momentary torque	Max. input speed	Allowable average input speed	Backlash (arc sec)	Transmission accuracy (arc sec)	Noise (dB)
		N·m	N·m	N·m	N·m	r/min	r/min	⩽	⩽	⩽
5	50	0.25	0.6	0.37	1.25	8500	4000	50	180	60
	100	0.4	1	0.66	1.9			35	180	60
8	50	1.25	2.3	1.6	4.6	8000	3500	35	120	60
	100	1.65	3.3	2.3	6.3			20	120	60
11	50	2.4	5.8	3.5	11.5	8000	3500	24	120	60
	100	3.5	7.7	6.2	17.5			20	120	60

Starting torque /cN·m

Ratio \ Model	5	8	11
50	0.5	1	2.4
100	0.4	0.8	1.5

Ratcheting torque /N·m

Ratio \ Model	5	8	11
50	2.5	9.5	27
100	2.8	11	34

Buckling torque /N·m

Model	5	8	11
All Ratios	5	18	45

Hysteresis loss /arc min

Ratio \ Model	5	8	11
50	4	3.5	3
80 or more	4	3	2.5

Stiffness of RHSD-mini series $\times 10^4$ N·m/rad

Ratio \ Model		5	8	11
50	K1	0.009	0.037	0.19
	K2	0.01	0.051	0.23
	K3	0.012	0.071	0.27
80 or more	K1	0.012	0.073	0.23
	K2	0.014	0.077	0.26
	K3	0.017	0.1	0.37

RHSD-mini Series of Harmonic Reducer

RHSD-mini-I Outline Drawing

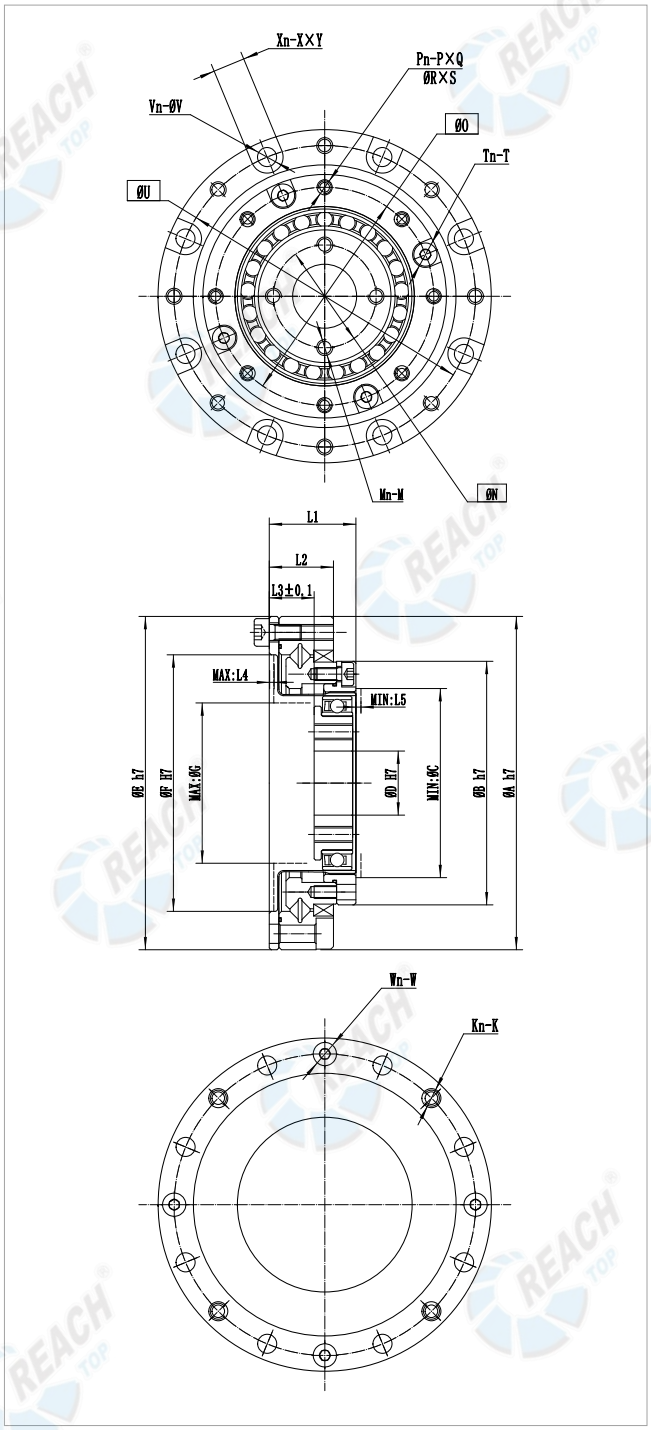

RHSD-mini-I Dimension Table

Symbol \ Model	5	8	11
ØA h7	32	40	52
ØB h7	22.5	30	38
MIN:ØC	15.5	21.5	29.5
ØD H7	4	7	10
ØE h7	32	40	52
ØF H7	24	30	40
MAX:ØG	11.1	18	25
Mn	4	4	4
M	M1.6	M2	M2.5
ØN	7	10	16
Kn	4	4	4
K	1.6	M2	M2.5
ØO	18.5	26	34
Pn	6	8	8
P	1.6	M2	M2
Q	2.5	3	3.5
ØR	1.8	2.4	2.4
S	2	2.5	3
Tn	3	4	4
T	M1.6	M1.6	M2
ØU	28.5	36	47
Vn	6	8	8
ØV	1.8	2.3	3
Xn	6	8	8
X	3.2	4	5
Y	2	2.5	2.7
Wn	3	4	4
W	M1.6	M2	M2.5
L1	10.5	11	13.5
L2	7	8	10
L3±0.1	7.6	6.1	7
MAX:L4	0.7	0.7	0.7
MIN:L5	0.6	0.8	0.8
L6	2.5	4.5	6

RFR Series Precision Double Circular Spline Harmonic Reducer

Features

- Ultra thin Structure for high-torque applications;
- Composed of 4 components;
- Flexspline with thin-walled cylindrical geometry;
- An additional Circular Spline (matching Flexspline tooth count) integrated for output coupling;
- Compact and simple design;
- Superior positional and rotational accuracies.

Structure of the RFR Series Component Type

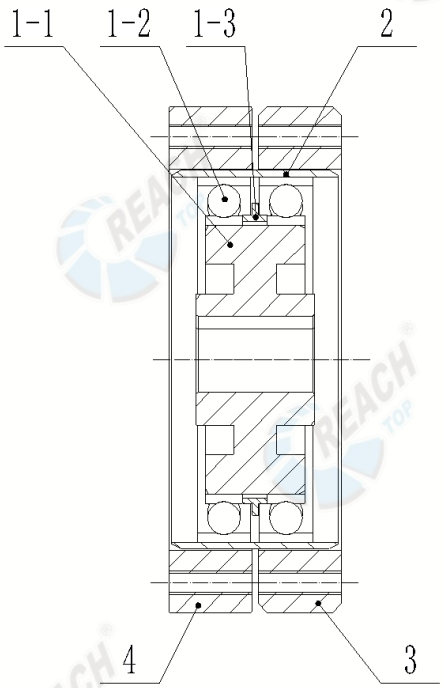

1	Wave Generator
1-1	Wave Generator hub
1-2	Flexible bearings
1-3	Bearing block ring
2	Flexspline
3	Circular Spline D
4	Circular Spline S

Distinction between Circular Spline D and Circular Spline S:
The outer chamfer of Circular Spline D is larger than that of Circular Spline S.

RFR Series Precision Double Circular Spline Harmonic Reducer

Rotational Direction and Reduction Ratio

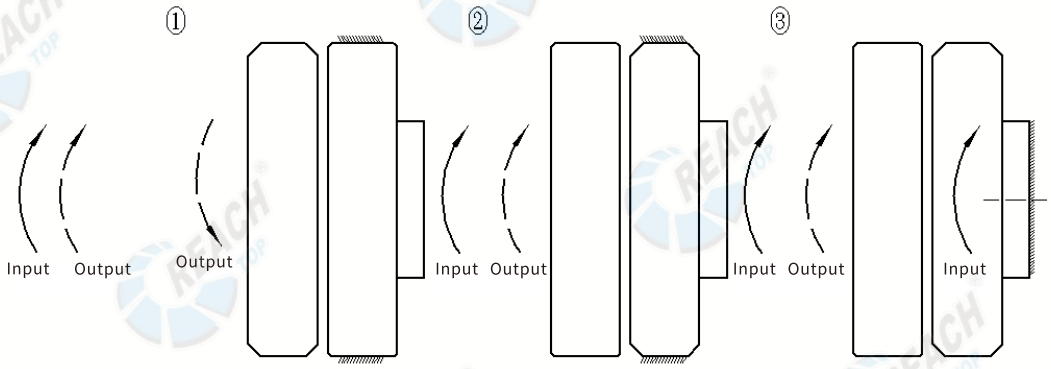

①Reducer
Input: Wave Generator
Output: Circular Spline D $i=-\frac{1}{R}$
Fixed: Circular Spline S

②Reducer
Input: Wave Generator
Output: Circular Spline D $i=\frac{1}{R+1}$
Fixed: Circular Spline S

③Reducer
Input: Wave Generator
Output: Circular Spline D $i=\frac{R}{R+1}$
Fixed: Circular Spline S

Coding Rules

RFR – 20 – 100 – Model

Series	Size	Ratio													Model
RFR	20	50	-	80	100	-	128	-	-	160	-	-	-	-	Model
	25	50	-	80	100	120	-	-	-	160	200	-	-	-	
	32	50	78	-	100	-	-	131	157	-	200	-	-	260	
	40	50	-	80	100	-	128	-	-	160	200	-	258	-	
	50	-	-	80	100	120	-	-	-	160	200	242	-	-	

The reduction ratio value is based on the following configuration: Input: Wave Generator, fixed end: Circular Spline S, output end: Circular Spline D.

RFR Series Precision Double Circular Spline Harmonic Reducer

Technical Data

Model	Ratio	Rated torque at 2000rpm		Peak torque at start /stop		Max. average load torque		Max. momentary torque		Rated input rotational speed	Max. input speed (RPM)		Limit for average input speed (RPM)		Moment of inertia	
		N·m	kgf·m	N·m	kgf·m	N·m	kgf·m	N·m	kgf·m	r/min	Oil lubrication	Grease lubrication	Oil lubrication	Grease lubrication	I $\times 10^{-4}$kg·m^2	J $\times 10^{-5}$kgf·ms^2
14	50	4.4	0.45	5.4	0.55	5.4	0.55	13.7	1.4	2000	6000	3600	4000	2500	0.06	0.061
	88	5.9	0.6	9.8	1	9.8	1	19.6	2							
	100	7.8	0.8	13.7	1.4	9.8	1	19.6	2							
	110	7.8	0.8	13.7	1.4	9.8	1	19.6	2							
20	50	25	2.5	34	3.5	34	3.5	69	7.0	2000	6000	3600	3600	2500	0.32	0.33
	80	34	3.5	41	4.2	41	4.2	72	7.3							
	100	40	4.1	53	5.4	49	5.0	94	9.6							
	128	40	4.1	67	6.8	49	5.0	102	10.4							
	160	40	4.1	77	7.9	49	5.0	86	8.8							
25	50	39	4.0	55	5.6	55	5.6	108	11.0	2000	5000	3600	3000	2500	0.7	0.71
	80	56	5.7	69	7.0	69	7.0	122	12.4							
	100	67	6.8	91	9.3	91	9.3	160	16.3							
	120	67	6.8	108	11.0	108	11.0	190	19.4							
	160	67	6.8	135	13.8	108	11.0	172	17.5							
	200	67	6.8	147	15.0	108	11.0	172	17.5							
32	50	76	7.7	108	11.0	108	11.0	216	22.0	2000	4500	3600	2500	2300	2.6	2.61
	78	108	11.0	137	14.0	137	14.0	245	25.0							
	100	137	14.0	176	17.9	176	17.9	323	32.9							
	131	137	14.0	255	26.0	216	22.0	451	46.0							
	157	137	14.0	294	30.0	216	22.0	500	51.0							
	200	137	14.0	314	32.0	216	22.0	372	37.9							
	260	137	14.0	314	32.0	216	22.0	372	37.9							
40	50	137	14.0	196	20.0	196	20.0	353	36.0	2000	4000	3300	2000	2000	6.8	6.9
	80	196	20.0	245	25.0	245	25.0	431	43.9							
	100	255	26.0	314	32.0	314	32.0	549	56.0							
	128	294	30.0	392	40.0	392	40.0	686	70.0							
	160	294	30.0	461	47.0	451	46.0	813	82.9							
	200	294	30.0	529	53.9	451	46.0	745	76.0							
	258	294	30.0	627	63.9	451	46.0	745	76.0							

RFR Series Precision Double Circular Spline Harmonic Reducer

Outline Drawing

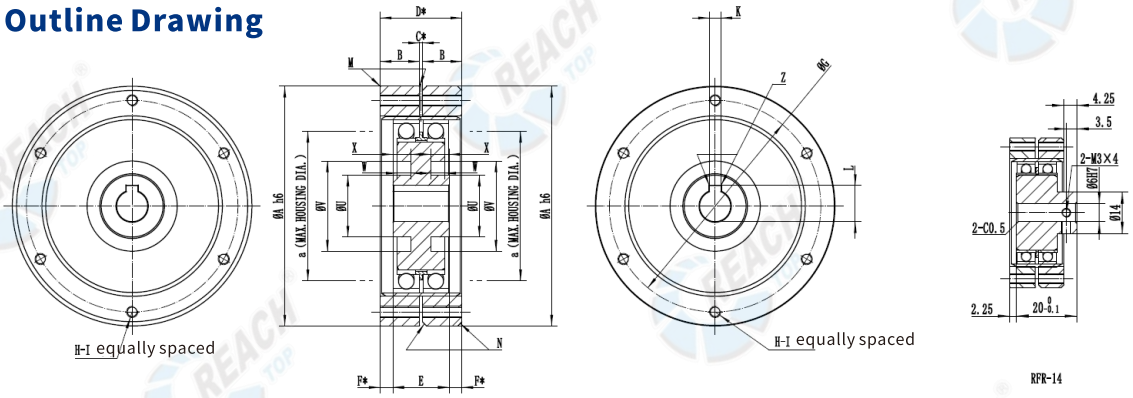

Dimension Table

Model / Symbol	14	20	25	32	40
ΦAh6	50	70	85	110	135
B	8.5	12	14	18	21
C*	1	1	1	1	1
D*	18	25	29	37	43
E	/	17.3	20	25.9	31.5
F*	/	3.85	4.5	5.55	5.75
ΦG	44	60	75	100	120
H	6	6	6	6	6
I	M3	M3	M4	M5	M6
ΦJ（H7）	6	9	11	14	14
K(JS9)	/	3	4	5	5
L	/	10.4	12.8	16.3	16.3
M	C0.2	C0.2	C0.2	C0.2	C0.4
N	C1	C1	C1.5	C1.5	C1.5
a	29	42	53	69	84
ΦU	/	/	1.5	1.5	1.5
ΦV	/	/	1	1	1
W	/	/	53	69	84
X	/	/	1.6	1.9	2.5
Z	/	R0.08~0.16	R0.08~0.16	R0.08~0.25	R0.08~0.25
Weight (kg)	0.25	0.55	0.83	1.72	2.95

1.The dimension codes C, D, and F represent the axial connection dimensions of the Wave Generator, Flexspline, and Circular Spline respectively. These dimensions are critical to performance, strength, etc.Strict adherence is required.

2.Four components (Wave Generator, Flexspline, Circular Spline D, Circular Spline S) are delivered disassembled .

RFRS Series Precision Double Circular Spline Harmonic Reducer With Circular And Bearing Integrated

Features

- Ultra thin Structure for high-torque applications;
- Composed of 4 components;
- Flexspline with thin-walled cylindrical geometry;
- An additional Circular Spline (matching Flexspline tooth count) integrated for output coupling;
- Compact and simple design;
- Superior positional and rotational accuracies.

Structure of the RFRS Series Component Type

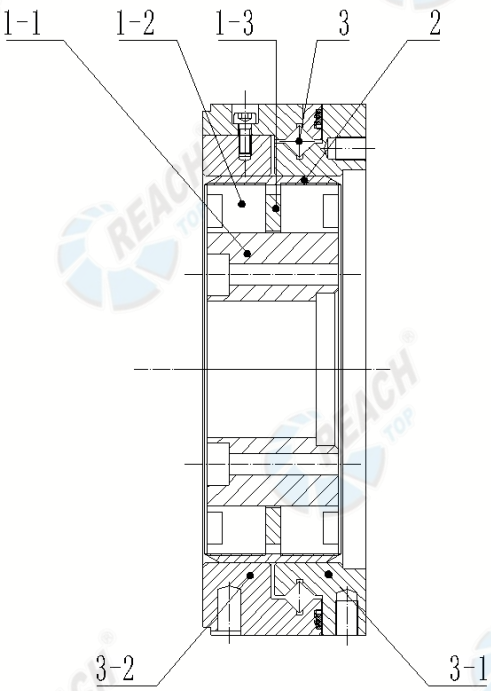

1	Wave Generator
1-1	Wave Generator hub
1-2	Flexible bearings
1-3	Bearing block ring
2	Flexspline
3	Crossed roller bearings
3-1	Crossed roller bearing inner ring (with Circlular Spline S)
3-2	Crossed roller bearing inner ring (with Circlular Spline D)

The Circular Spline D is the outer ring of the cross roller bearing, and the Circular Spline S is the inner ring of the cross roller bearing.

RFRS Series Precision Double Circular Spline Harmonic Reducer With Circular And Bearing Integrated

Rotational Direction and Reduction Ratio

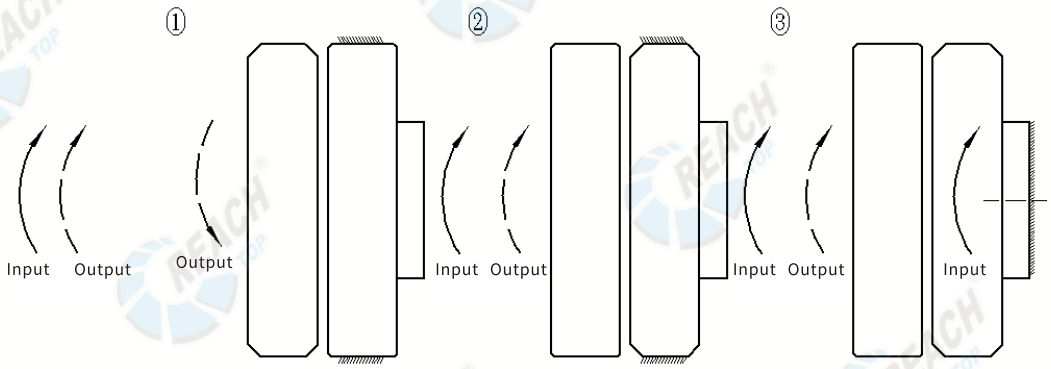

①Reducer
Input: Wave Generator
Output: Circular Spline D $i=-\frac{1}{R}$
Fixed: Circular Spline S

②Reducer
Input: Wave Generator
Output: Circular Spline D $i=\frac{1}{R+1}$
Fixed: Circular Spline S

③Reducer
Input: Wave Generator
Output: Circular Spline D $i=\frac{R}{R+1}$
Fixed: Circular Spline S

Coding Rules

RFRS – 20 – 100 – Model

Series	Size	Ratio			Model
RFRS	14	50	80	100	Model
	20	50	80	100	
	25	50	80	100	
	40	50	80	100	

The reduction ratio value is based on the following configuration: Input: Wave Generator, fixed end: Circular Spline S, output end: Circular Spline D.

RFRS Series Precision Double Circular Spline Harmonic Reducer With Circular And Bearing Integrated

Technical Data

Model	Ratio	Rated torque at 2000rpm		Peak torque at start /stop		Max. average load torque		Max. momentary torque		Rated input rotational speed	Max. input speed (RPM)		Limit for average input speed (RPM)		Moment of inertia	
		N·m	kgf·m	N·m	kgf·m	N·m	kgf·m	N·m	kgf·m	r/min	Oil lubrication	Grease lubrication	Oil lubrication	Grease lubrication	I $\times 10^{-4}$kg·m^2	J $\times 10^{-5}$kgf·ms^2
14	50	4.4	0.45	5.4	0.55	5.4	0.55	13.7	1.4	2000	6000	3600	4000	2500	0.06	0.061
	80	5.9	0.6	9.8	1	9.8	1	19.6	2							
	100	7.8	0.8	13.7	1.4	9.8	1	19.6	2							
20	50	25	2.5	34	3.5	34	3.5	69	7.0	2000	6000	3600	3600	2500	0.32	0.33
	80	34	3.5	41	4.2	41	4.2	72	7.3							
	100	40	4.1	53	5.4	49	5.0	94	9.6							
25	50	39	4.0	55	5.6	55	5.6	108	11.0	2000	5000	3600	3000	2500	0.7	0.71
	80	56	5.7	69	7.0	69	7.0	122	12.4							
	100	67	6.8	91	9.3	91	9.3	160	16.3							
32	50	76	7.7	108	11.0	108	11.0	216	22.0	2000	4500	3600	2500	2300	2.6	2.61
	80	108	11.0	137	14.0	137	14.0	245	25.0							
	100	137	14.0	176	17.9	176	17.9	323	32.9							

RFRS Series Precision Double Circular Spline Harmonic Reducer With Circular And Bearing Integrated

Outline Drawing

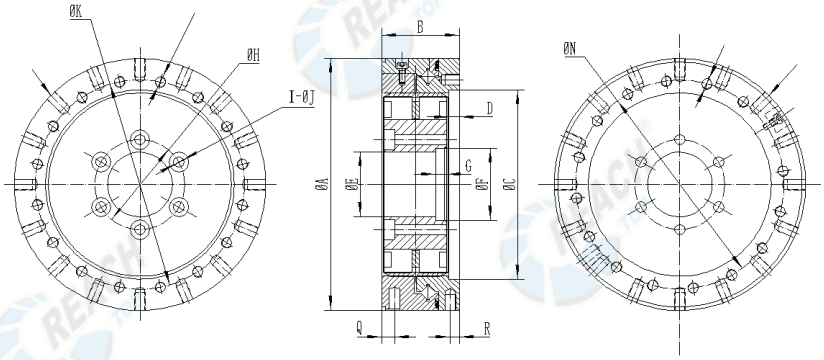

Dimension Table

Model / Symbol	14	20	25	32	40
ΦAh7	50	70	85	116	140
B	19.5	21.5	28.5	48	59.5
ΦC	38	52.5	64.8	/	/
D	2	3	3	/	/
ΦE	13	18	22	/	/
ΦF	15	20	40	/	/
G	2	3	5	/	/
ΦH	19.5	25	30	/	/
I	4	6	6	/	/
ΦJ	2.4	2.9	3.4	/	/
ΦK	45	58.2	72	95	118
L	16	16	16	16	16
ΦM	M2.5	M3	M4	M5	M5
ΦN	40	58	72	100	120
O	12	15	15	15	15
ΦP	M2.5	M3	M3	M5	M5
Q	4	3.5	5.5	/	/
R	2.5	2.5	4	/	/
S	15	16	16	/	/
ΦT	M2	M3	M4	/	/
U	11	16	16	/	/
ΦV	M2.5	M3	M4	/	/

Note: C~V can be customized in reference to the table.

Brake-integrated Harmonic Drive

1.Structural Composition

The brake-integrated harmonic drive comprises a harmonic drive reducer and electromagnetic brake unit, with the brake coil assembly embedded within the reducer housing. This integration achieves axial length reduction and system weight minimization.

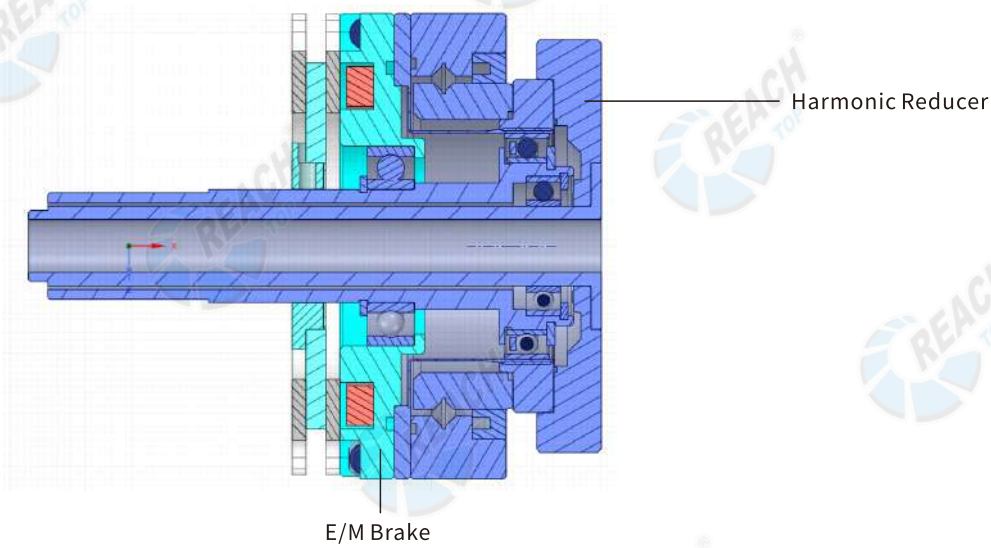

2.Operating Principle

The square hub of the brake is connected to the shaft of the wave generator. In de-energized state, the brake mechanically locks the shaft to halt rotation. When the brake is energized, the brake is released, allowing the wave generator to rotate freely.

3.Application Range

Joint modules

Collaborative robots

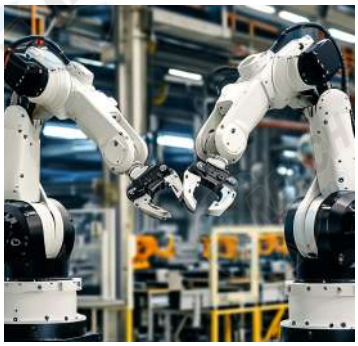

Automated production lines

4.Application Examples

Applications of integrated brake harmonic reducers in joint modules

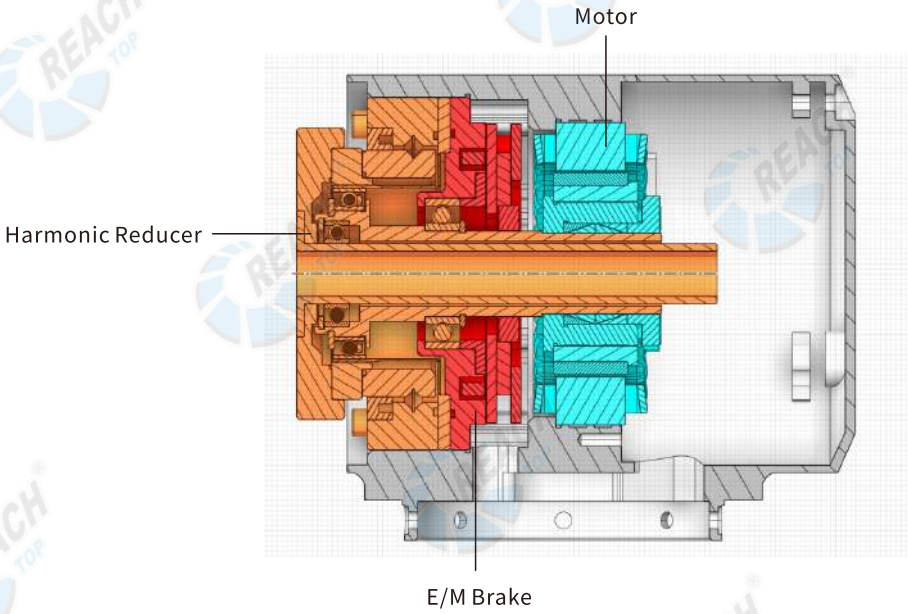

Applications of separate harmonic reducers and brakes in joint modules

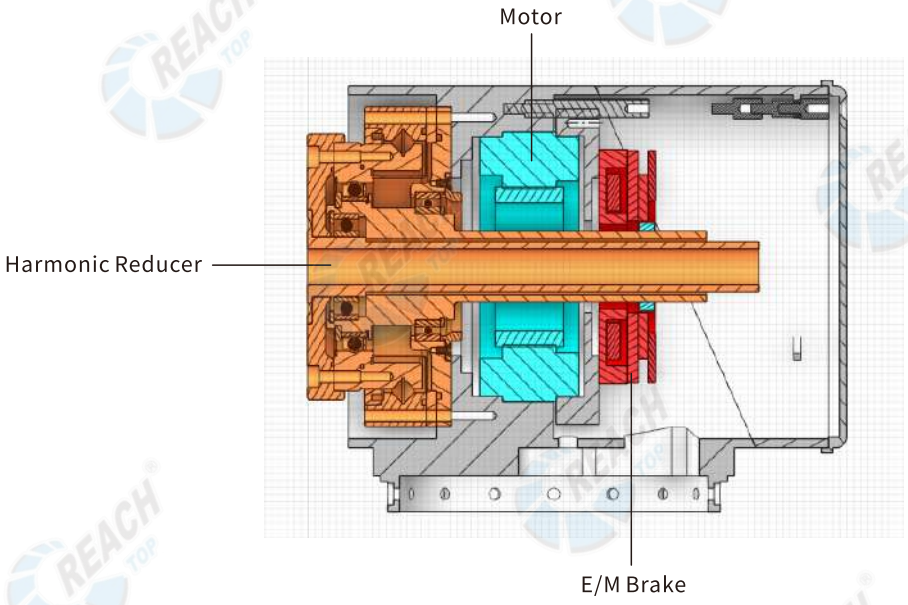

Brake-integrated Harmonic Drive

Outline Drawing

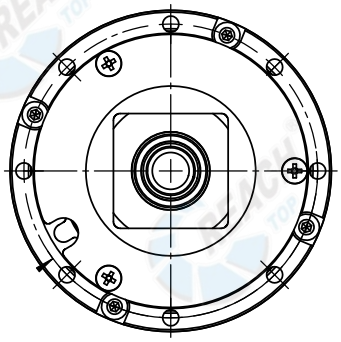

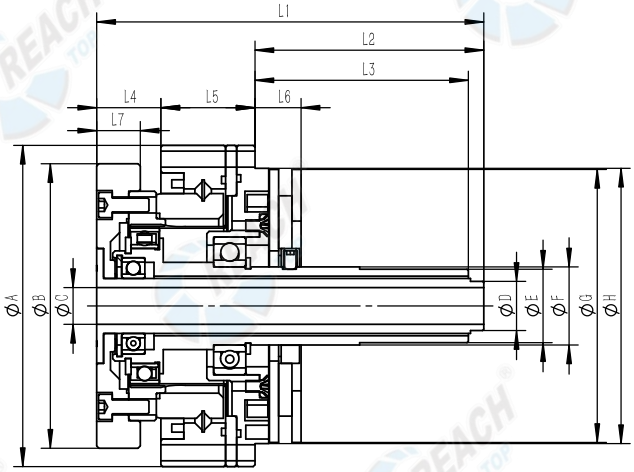

Dimension Table

Symbol / Model	ØA	ØB	ØC	ØD	ØE	ØF	ØG	ØH
RBD14	70	62	8	11	16	17	59.5	60
RBD17	80	64	9	12	22	25	67	66.5
RBD20	90	82	11	13	28	30	74	76
RBD25	110	98	12	14	28	35	82	83.5
RBD32	142	115	13	15	44	45	123.5	123.5

Symbol / Model	Tn	T	L1	L2	L3	L4	L5	L6	L7
RBD14	8	3.5	84.35	39.8	36.5	14	20.5	10.05	9.5
RBD17	16	3.5	91.5	49.5	45.5	15	23	11.1	9.5
RBD20	16	3.5	98.6	59.1	55.5	15	24.5	11.5	9.5
RBD25	16	4.5	117.3	70.3	67.4	21	26	17.2	12
RBD32	16	4.5	136.5	85.2	80.5	22	32	12.95	12

Brake-integrated Harmonic Drive

Techinical Data

Model	Harmonic Reducer									E/M brake							Total weight
	Ratio	Rated torque (N·m)	Peak torque at start and stop (N·m)	Max. average torque (N·m)	Allowable max. momentary torque (N·m)	Max. input speed (RPM)	Average input speed (RPM)	Transmission accuracy (arc sec)	Backlash (arc sec)	Over-excitation voltage (V)	Over-excitation power (W)	Over-excitation current (A)	Steady-state excitation voltage (V)	Steady-state excitation power (W)	Steady-state excitation current (A)	Brake backlash (°)	Weight (kg)
RBD14	50	6.6	23	8.6	43	6000	3500	⩽90	20	24/48	16.5/24	0.688/0.5	7/18	1.4/3.4	0.2/0.19	2	0.85
	80	9.6	29	13.5	57				10							2	
	100	9.6	34	13.5	66				10							2	
RBD17	50	19.8	42	32	86	6000	3500	⩽90	20	24/48	16.5/24	0.688/0.5	7/18	1.4/3.4	0.2/0.19	2	1.2
	80	27.5	53	33	108				20							2	
	100	30	66	49	134				10							2	
	120	30	66	49	107				10							2	
RBD20	50	32	69	42	121	6000	3500	⩽60	20	24/48	16.5/24	0.688/0.5	7/18	1.4/3.4	0.2/0.19	2	1.44
	80	42	91	58	158				20							2	
	100	50	102	61	182				10							2	
	120	50	108	61	182				10							2	
	160	50	113	61	182				10							2	
RBD25	50	48	121	68.5	230	5500	3500	⩽60	20	24/48	16.5/24	0.688/0.5	7/18	1.4/3.4	0.2/0.19	2	2.55
	80	78	169	107	315				20							2	
	100	84	194	133	351				10							2	
	120	84	207	133	376				10							2	
	160	84	217	133	388				10							2	
RBD32	50	94	267	133	472	4500	3500	⩽60	20	24/48	16.5/24	0.688/0.5	7/18	1.4/3.4	0.2/0.19	2	4.0
	80	146	376	206	702				20							2	
	100	169	411	267	800				10							2	
	120	169	436	267	848				10							2	
	160	169	459	267	848				10							2	

Note:24/48 indicates 24V and 48V both available.

Coding Rules

RBD - 14 - 100 - 24 - 0.32

Model Numbers

Ratio

Brake Voltage

Brake Torque

Plastic Harmonic Reducer

1.Structure of Components

The structure of plastic Harmonic Reducer is similar to steel Harmonic Reducer. The difference is that its Circular Spline and Flexspine are made of engineering plastics and its structural design is optimized according to material properties. Plastic parts could be manufactured by injection molding and machining, without heat treatment required.

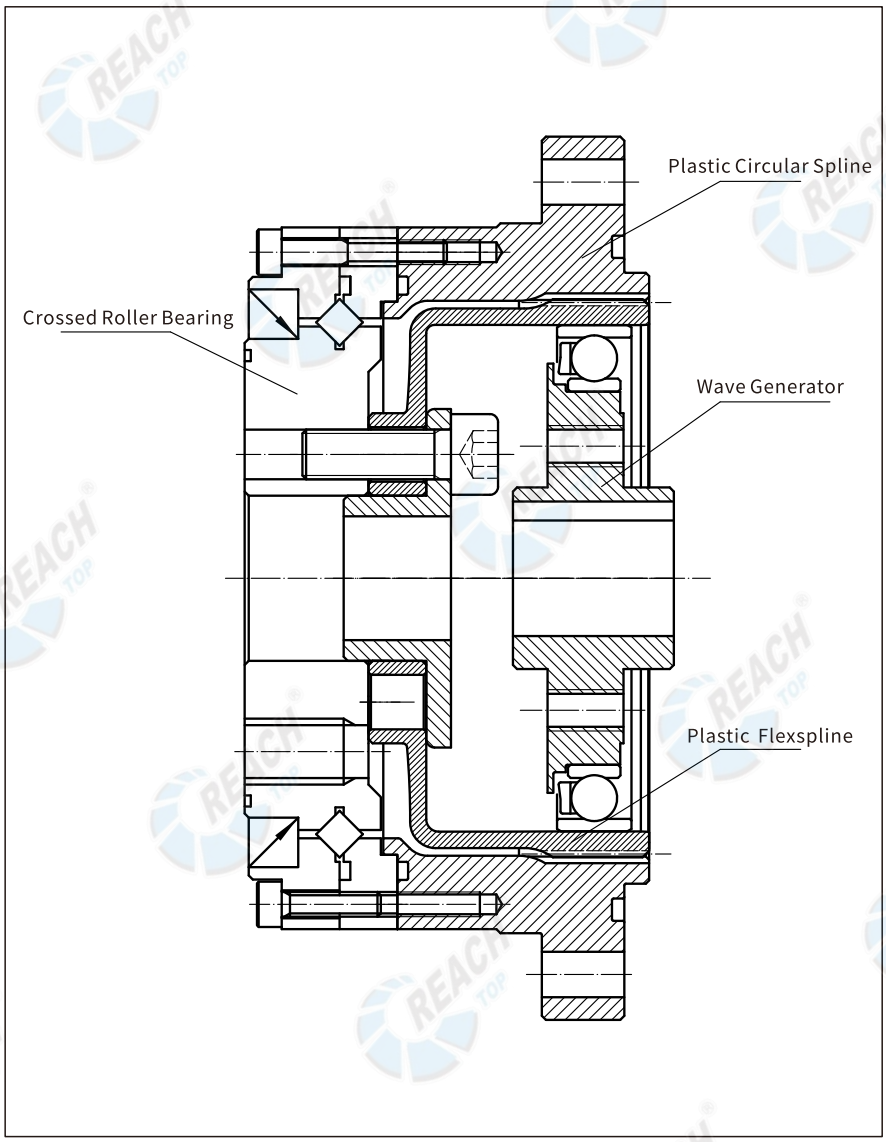

Plastic Harmonic Reducer

2.Product Features

Light-weight More than 1/3 lighter than steel harmonic reducer.

Low-cost 1/3 lower than steel harmonic reducer.

Quiet 10dB lower than steel harmonic reducer on average.

Self-lubricating The engineering plastics is self-lubricating, thus no lubricating grease required.

Fast delivery Core parts will be produced by injection molding in the future, in that case, large quantities can be delivered quickly.

3.Application

Used for light-weight, low-cost, quiet, maintenance-free, low-load, corrosion-resistant and high-precision scenarios, such as humanoid robots, household consumer robots and commercial welcoming robots.

Humanoid robots

Household consumer robots

Commercial welcoming robots

We focus on the research of material science and deeply explore the characteristics and potential of various materials. We will continue to pay attention to the invest of different materials in Harmonic Reducer and optimize the performance and application of materials.

To Become the Preferred Brand of Global Customers

301596.SZ

https://www.reachmachinery.com

400-090-7210

ADD: No.909 Middle Section 4. West Airport Ave, Southwest Airport Economic Development Zone, Shuangliu District, Chengdu, Sichuan Province, China

No. ZH-20250408